GUILD ◆ EDITION

Woodsmith®

Woodsmith.com

Vol. 40 / No. 236

BYRDCLIFFE-INSPIRED LINEN PRESS

Also:

5 Tips to Get More from Your Jig Saw

Work Smarter & Safer at the Table Saw

Learn The Essentials for Better Sharpening

Quick & Easy Cabinet Door Construction

Woodsmith®

EDITOR Vincent Ancona
MULTIMEDIA EDITOR Phil Huber
ASSOCIATE EDITOR Robert Kemp
ASSISTANT EDITORS Erich Lage, Logan Wittmer
CONTRIBUTING EDITOR Bryan Nelson

EXECUTIVE ART DIRECTOR Todd Lambirth
SENIOR ILLUSTRATORS Harlan V. Clark, Dirk Ver Steeg, Peter J. Larson
SENIOR GRAPHIC DESIGNER Bob Zimmerman
GRAPHIC DESIGNER Becky Kralicek

CREATIVE DIRECTOR Chris Fitch
PROJECT DESIGNERS Dennis Volz, Dillon Baker
PROJECT DESIGNER/BUILDER John Doyle
CAD SPECIALIST Steve Johnson
SHOP CRAFTSMAN Dana Myers

SENIOR PHOTOGRAPHER Crayola England
ASSOCIATE STYLE DIRECTOR Rebecca Cunningham
SENIOR ELECTRONIC IMAGE SPECIALIST Allan Ruhnke
PRODUCTION ASSISTANT Minniette Johnson

FOUNDING EDITOR Donald B. Peschke
MANAGING DIRECTOR CLIENT SOLUTIONS Dean Horowitz
PUBLISHER Steven M. Nordmeyer
VICE PRESIDENT GENERAL MANAGER Peter H. Miller, Hon. AIA

Woodsmith® (ISSN 0164-4114) is published bimonthly by Cruz Bay Publishing, Inc., 2143 Grand Ave, Des Moines, IA 50312.
Woodsmith® is a registered trademark of Cruz Bay Publishing.
Copyright© 2018 Cruz Bay Publishing, Inc. All rights reserved.
Subscriptions: Single copy: $6.95.
Canadian Subscriptions: Canada Post Agreement No. 40038201. Send change of

Printed in U.S.A.

WoodsmithCustomerService.com

ONLINE SUBSCRIBER SERVICES

- **VIEW** your account information
- **RENEW** your subscription
- **CHECK** on a subscription payment
- **PAY** your bill
- **CHANGE** your mailing or e-mail address
- **VIEW/RENEW** your gift subscriptions
- **TELL US** if you've missed an issue

CUSTOMER SERVICE Phone: 800-333-5075 weekdays

SUBSCRIPTIONS
Customer Service
P.O. Box 842
Des Moines, IA 50304-9961
subscriptions@augusthome.com

EDITORIAL
Woodsmith Magazine
2143 Grand Avenue
Des Moines, IA 50312
woodsmith@woodsmith.com

ACTIVE INTEREST MEDIA

PRESIDENT & CEO **Andrew W. Clurman**
SENIOR VICE PRESIDENT, TREASURER & CFO **Michael Henry**
CHIEF INNOVATION OFFICER **Jonathan Dorn**
VICE PRESIDENT, AUDIENCE DEVELOPMENT **Tom Masterson**
VICE PRESIDENT, CONTROLLER **Joseph Cohen**
VICE PRESIDENT, RESEARCH **Kristy Kaus**
BOULDER HR DIRECTOR **JoAnn Thomas**
AIM BOARD CHAIR **Efrem Zimbalist III**

from the editor

Sawdust

Every now and then, I come across a project that really grabs my attention as something that I'd like to build. But often, there's an element to the design that makes me stop and question whether or not it's beyond my abilities. The heirloom project in this issue — the linen press on page 42 — is just such an example. This cabinet is a reproduction of a piece that was originally built in the early 20th century at the Byrdcliffe artist colony in Woodstock, New York. From a woodworking standpoint, there's nothing terribly demanding about it. It's built with frame and panel construction, along with a few dadoes and grooves — nothing that you probably haven't tackled before.

But the part of the linen press that is the most visually interesting — the door panels — is also the part that may seem the most challenging at first glance. The panels are carved with a leaf motif and then painted to match the colors of autumn. If you've never attempted either one, carving and painting are two skills that may seem a bit daunting. And I have to admit that it seemed intimidating to me as well. But as I watched the project come together in our shop, I began to see that it wasn't nearly as frightening as I first thought.

For starters, we created the carved look of the panels on our linen press not by carving, but by cutting the pattern out of a thin blank on a scroll saw. After the scroll-sawn panels are painted, they get glued down to a backer panel. This gives the panels a sculpted look without all the work of having to carve them out of a solid block of wood.

When it came to the painting, we tried out a couple of different techniques to find something that looked good, but was still fairly easy to do. We ended up using watercolor tubes. These paints are inexpensive and easy to mix and blend. We've also provided a "paint-by-number" chart, so you can get good results even if you're not a Rembrandt or Renoir. (You can read more about the technique for making and painting the panels on page 52.)

The point I want to stress is not to let the idea of trying something unfamiliar prevent you from undertaking a project. Often the best way to grow is to push ourselves beyond the bounds of our comfort zones.

Vince

contents

No. 236 April/May 2018

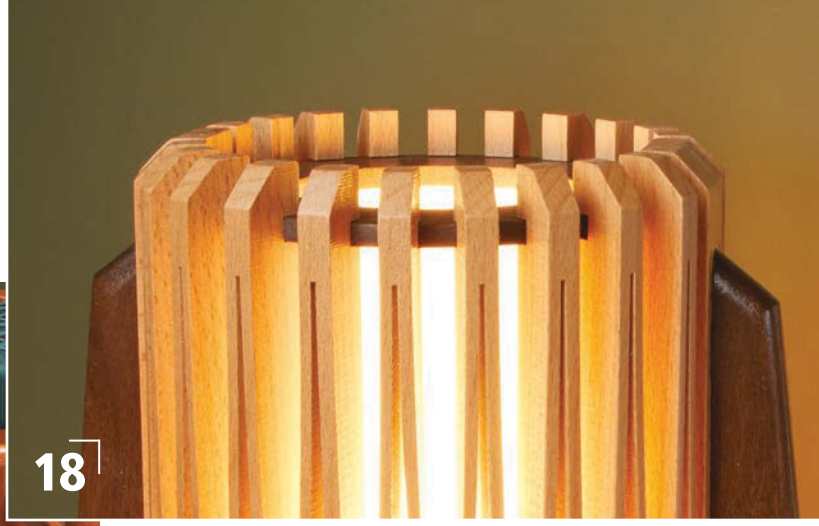

Projects

weekend project

Desk Lamp 18

Put your band saw to work making the shade of this modern-looking lamp. The technique is easy to master and a great way to create a unique look.

shop project

Hand Plane 24

With just a few scraps of wood and a weekend in the shop, you can fashion your own hand plane that's sure to become one of your most-used tools.

designer project

Woven-Seat Stool 30

After building the wood framework of this stool, you'll have the opportunity to expand your skills further by learning how to weave the seat for a comfortable perch.

shop project

Router Table Storage 36

Using a commercial router table as the starting point, this project adds plenty of storage for bits and accessories. As an added bonus, it incorporates under-the-table dust collection.

heirloom project

Byrdcliffe-Inspired Linen Press 42

Whether you decide to use it in the bedroom, dining room, or living room, this handsome cabinet combines functional storage with an attractive appearance.

Departments

from our readers
Tips & Techniques 5

all about
Basswood 10

router workshop
Blind & Through Slots 12

great gear
Scrapers 14

woodworking technique
Dowel Joinery 16

woodworking technique
Relief-Carved Panels 52

working with tools
Jig Saws 56

in the shop
Woodworking Questions 58

woodworking essentials
Basic Sharpening 60

mastering the table saw
Featherboards 62

from our readers

Tips & Techniques

Quick Corner Chamfers

I find myself using corner chamfers on many projects. To help speed up this sometimes lengthy process and get consistent results, I built the jig that's shown here.

ADJUSTABLE. The jig is attached to my disc sander and is adjustable through a pair of stop blocks. The stop blocks hold a workpiece at a consistent 45°. One stop block is fixed in place, while a narrow slot in the other allows for adjustability. Loosening a knob lets you to move the stop block to produce different sized chamfers.

CONSTRUCTION. To build the jig, start by cutting the base out of plywood. A groove houses a set of hardwood runners that are attached to the bottom of the stop blocks. The right stop block and runner are glued in place. A slot is cut in the left stop block. A T-nut is installed into the bottom side of the base, and a knob holds the left stop block in place. To complete the jig, a hardwood runner is attached to the underside of the base. This runner rides in the miter gauge slot that is on the disc sander table.

Jim Lewis
Los Angeles, California

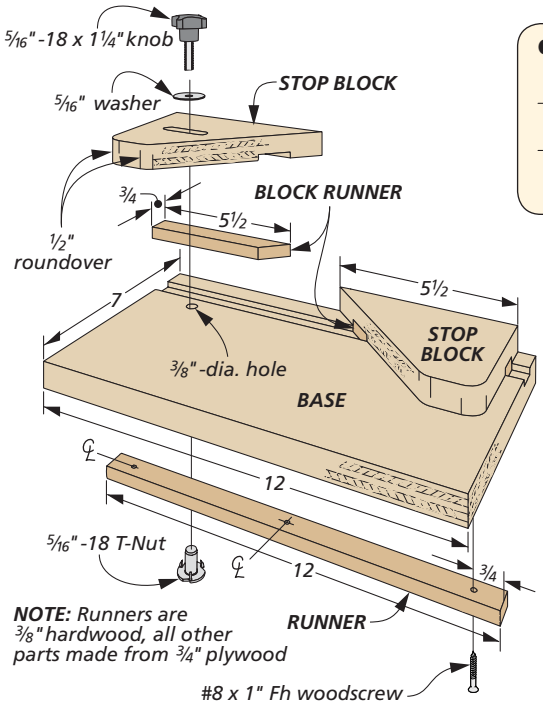

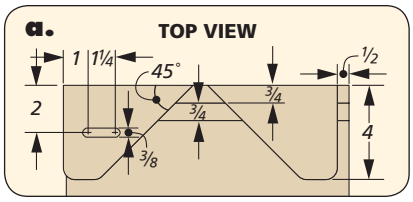

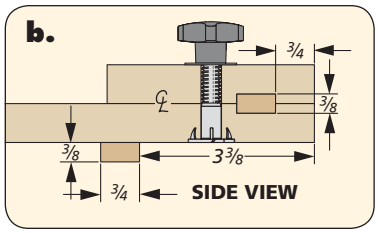

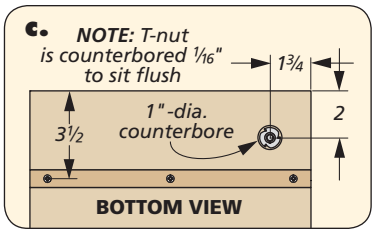

Win This Forrest Blade

Simply send us your favorite shop tips. If your tip or technique is selected as the featured reader's tip, you'll win a *Forrest Woodworker II* blade. To submit your tip or technique, go to *SubmitWoodsmithTips.com*. There you can upload your tips and photos for consideration.

The Winner!

Congratulations to Jim Lewis, the winner of this *Forrest Woodworker II*. To find out how you can win this blade, check out the information at left.

Efficient Dado Setup

One of the most important things when cutting box joints is to make sure the width of your dado blade matches the width of the key on your jig. Dado blades come with a number of different chippers and shims and it's always a cat-and-mouse game to get the right combination for a perfect fit. To help speed up my setup process, I came up with this simple solution.

When setting up a dado blade for a box joint jig (or any other jig that requires a dado blade), I use a marker to write directly on the jig which combination of chippers and shims I used. This allows me to quickly set up the jig the next time I use it.

Jim Longstaff
Saskatoon, Saskatchewan

Drawer Slide Outrigger

When recently building a bed from *Woodsmith*, I realized that cutting some of the large pieces on my table saw would be cumbersome. Even with an outrigger, it was hard to keep parts square. That's when I had an idea.

As you can see in the photo, I simply attached a drawer slide to a scrap of wood. The block and slide can be clamped in a portable workbench and adjusted so the height is even with my table saw. With the end of my workpiece resting on the drawer slide, I can push the board through the blade and make a cut with little effort.

William Kilpatrick
Fonthill, Ontario

QUICK TIPS

Fixed Marking Gauge. *Philip Braizer* of *Bristol, England* uses a scrap piece of hardwood to make a fixed marking gauge. Rabbets along each edge at different depths (3/8", 1/2", 3/4" and 1") provide quick, easy references for commonly used measurements.

Sharp Cheddar. *Dana Myers* from *Des Moines, IA* like to use an empty grated cheese container to discard his razors and blades. After using all of the contents and washing it out, the container finds a home in Dana's shop. The lid makes it easy to open and dispose of sharp items. When the container is full, he can simply toss it in the trash without worrying about somebody getting cut.

They See Me Scrollin'

When working on intricate scrollsaw panels, I was constantly having to reposition my blade to new starting holes. This requires loosening tension on the scroll saw arm, unlocking the blade, and holding the arm up while trying to feed the blade through a new starter hole.

To help ease the burden of holding up the arm, I came up with this simple "armrest." As you can see in the photo, it's a piece of scrap sized to fit under the scroll saw arm. A magnet recessed in one side holds it to the table while I'm working. Also, I cut a hole on one end to act as a handle. To use it, I grab the handle and rotate it into place. This cam action lifts the scroll saw arm into the upright position. Now, both of my hands are free and the arm is held up so I can thread the delicate blade through my starter holes.

Wyatt Myers
Olathe, Kansas

Clamp Storage

As a woodworker's collection of clamps grows, storage for all of them can become problematic. But I found a solution that's perfect because it's both inexpensive and quick.

I grabbed a scrap piece of 2" PVC pipe that I had left over from a previous project and drilled a series of holes sized to fit the bars on my clamps. On the front side, I drilled several holes to fasten the clamp rack to the wall with long, panhead screws. I capped both ends with wood plugs so the screw pressure doesn't distort the PVC. I've found these clamp racks are useful all around the shop and can even be hung in areas that go typically unused, such as hanging from the ceiling in my basement shop.

Edward Wargo
Burlington, New Jersey

DIGITAL WOODSMITH

SUBMIT TIPS ONLINE

If you have an original shop tip, we would like to hear from you and consider publishing your tip in one or more of our publications. Jump online and go to:

SubmitWoodsmithTips.com

You'll be able to tell us all about your tip and upload your photos and drawings. You can also mail your tips to "Woodsmith Tips" at the editorial address shown on page 2. We will pay up to $200 if we publish your tip.

RECEIVE FREE ETIPS BY EMAIL

Now you can have the best time-saving secrets, solutions, and techniques sent directly to your email inbox. Just go to:

Woodsmith.com
and click on,
"Woodsmith eTips"

You'll receive one of our favorite tips by email each and every week.

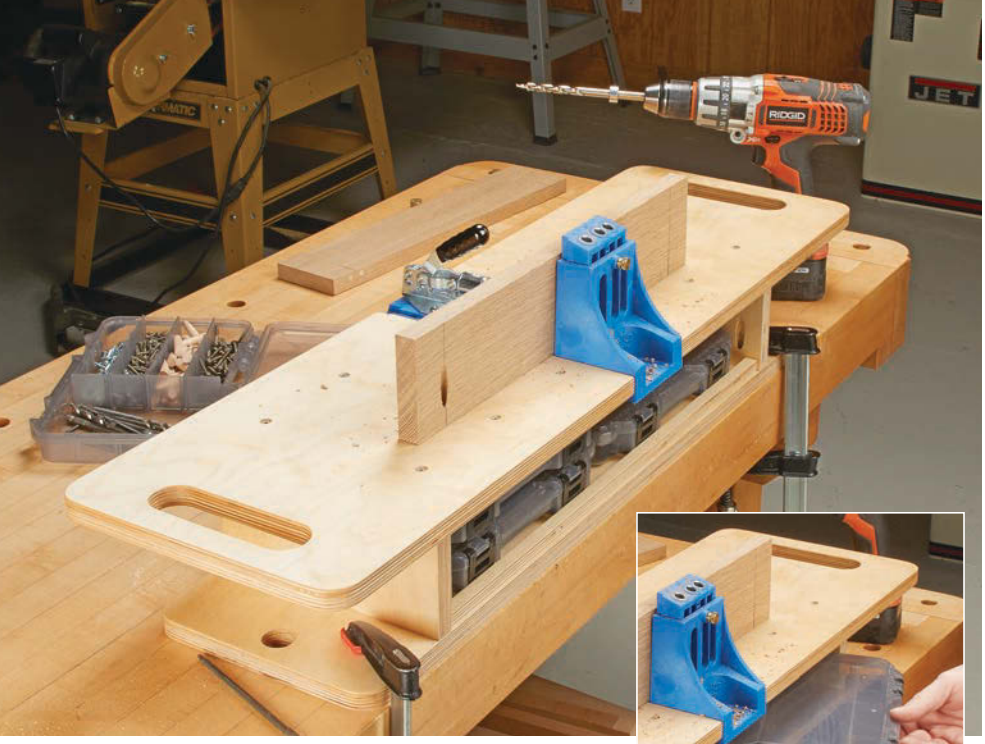

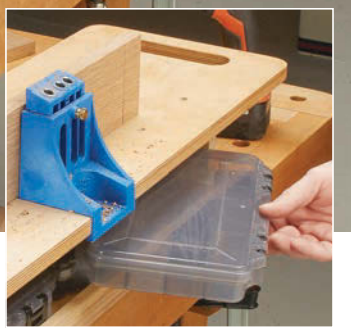

Pocket Screw Workstation

Pocket screws are hard to beat when you want a strong, accurate joint, and you want it quickly. Whenever I find myself using pocket screws, I usually use a lot of them. So to make my pocket hole jig even more efficient, I decided to make the workstation shown here.

The workstation brings the pocket-hole jig to a more comfortable working height. And the large wings on each side of the jig offer plenty of support for long workpieces, even when you're drilling near the end of the workpiece.

BUILT-IN STORAGE. Another handy thing about this station is the set of plastic storage cases that are housed in a compartment below the worksurface. These cases keep drill bits, pocket screws, plugs, and all the necessary accessories within reach while working.

CONSTRUCTION. The majority of the workstation is made of plywood and is held together with pocket screws, of course. A wide base allows you to clamp it to the workbench when it's in use. The sides are connected to a subtop that has spacer strips attached. The spacer strips raise the top so that it's flush with the pocket hole jig. The support wings get attached to the subtop through these strips. A set of cleats in the front and back of the base keep the storage cases in place.

PORTABILITY. Finally, the entire workstation can easily be carried to the bench using the hand holes. Simply clamp the station to your bench to use it. When you're done, pack everything back into the storage cases and slide them back in place. A pair of holes in the base allows you to hang it wherever you have room in your shop.

Fletcher Wittmer
Runnells, Iowa

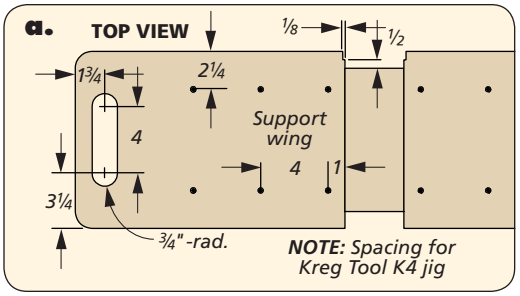

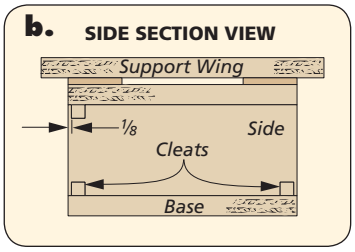

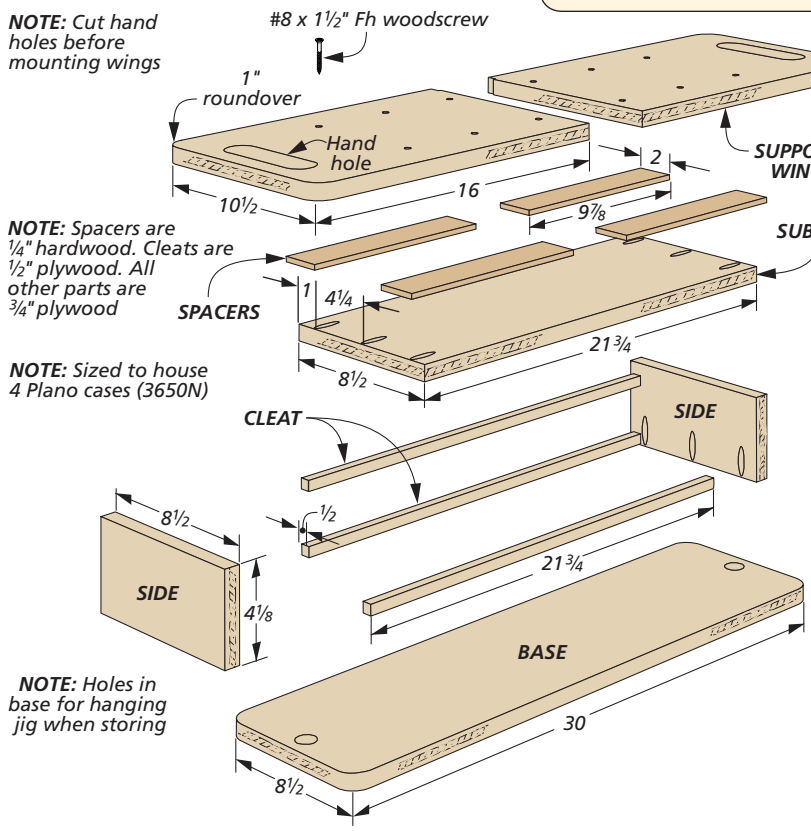

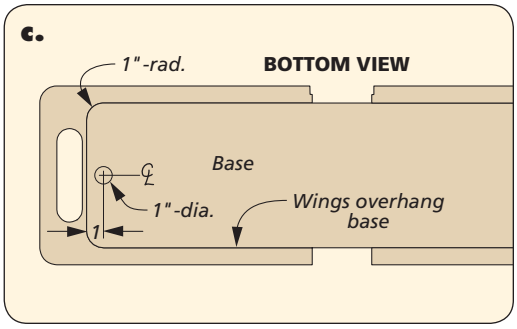

Plans Stand

Here's a problem that almost every woodworker can relate to. You're in the middle of a project and you need to check your plans. Of course, your bench is covered in tools and materials. It then becomes something of a treasure hunt trying to find your plans that are now buried under all the mess.

To fix this frustrating problem, I built the simple plan holder that you see here. The unique thing about it is that I installed a dowel on the bottom side that is the same size as the dog holes on my workbench. This allows me to position the stand wherever there's a dog hole and the plans can be pivoted to any position and will not fall over.

SLANT BASE. The construction of the plan stand starts with a base that is glued up from three layers of plywood. The face of the blank is then beveled at 70° to create a wedge-shaped base.

Attached to the base are a back, a narrow spacer, and a hardboard lip. The bottom edges of each of these pieces are beveled at 70° to match the angle of the base. The angle allows the magazine to stand up without falling over, and the lip keeps the pages spread open. After gluing all of the parts together, the last thing to do is drill a hole in the base for a dowel.

Dan Martin
Galena, Ohio

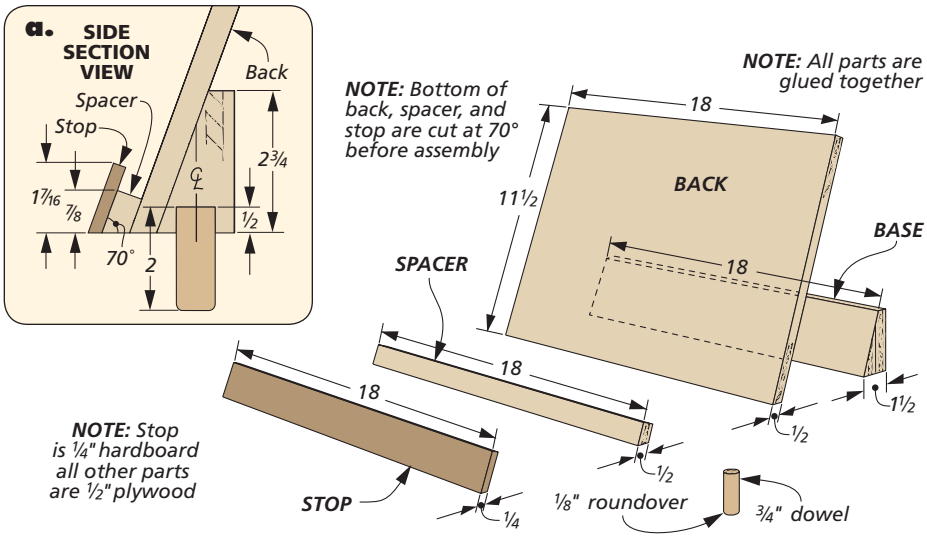

QUICK TIPS

Tape Depth Stop. *Charles Mak* of *Calgary, Alberta* uses a trick to ensure that all of his hand-cut dovetails are cut to the same depth. He simply marks the depth of cut with a piece of tape on his saw blade. This way he knows to stop sawing when the tape kisses the workpiece.

Pencil Holder. *Robert Patterson* of *Wisconsin Rapids, WI* came up with an innovative solution to store pencils at his machines. He came across some adhesive cable holders at a local hardware store and thought they would make great pencil holders for around the shop. By cutting a small section, he can stick them wherever he needs to have a pencil close at hand.

all about

Versatile Basswood

Carving — that's the first word that comes to mind when woodworkers talk about basswood. And rightly so, basswood leads the pack of woods that are considered good for carving. This is due to the nature of how the tree grows. It has very straight, even, stable grain with hardly any knots. The structure of the thin-walled grain (the grain that's so wonderful to carve), allows the wood's high moisture content to dry quickly. And once it's dry, basswood is very stable wood.

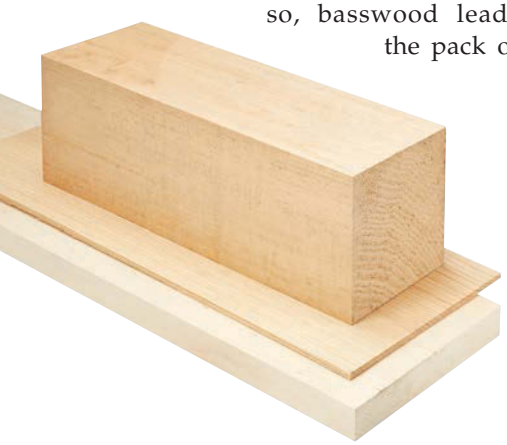

▲ Basswood's compliant nature makes it great for carving. It's also used as a secondary wood and for case parts.

As you can see in both photos on this page, basswood is pale white to light brown. This color transformation happens as it passes from sapwood to heartwood. Quartersawn basswood has a delicate fleck pattern. The sapwood that's been air dried is the most prized among carvers in the know.

A FAMILY AFFAIR. The tree from which basswood is derived is more commonly known as linden, and it's part of a large family of trees known as the *Tilia* genus. There's an interesting history to the name basswood. It's derived from a use for a part of the tree that's often overlooked in this day and age. The term *bast* is a Middle English term that loosely translates as *woody fibers.* The stringy, inner bark was in demand for it's rope-like characteristics. Whether or not the tree was actually called *bastwood* at any time, and when the 'T' disappeared if it was, no one knows for sure.

GROWING REGIONS. Four basswood family members are native to North America, and there are over 20 kin in Europe and the UK (known there as lime or linden). The map on the next page shows the areas where basswood is most prominent in North America.

Of the four family members that grow here, two are the focus for lumber harvesting. These two versions of basswood

are so close in nature that the industry doesn't bother with the distinction and both are marketed as basswood. The Great Lakes region, northeast United States, and eastern Canadian Provinces are where the majority of basswood lumber comes from.

USES. Historically, basswood has filled many roles. As I mentioned earlier, bast, or bast fiber, comes from the inner bark of basswood trees. And like jute, flax, and hemp, it was an organic source for rope and string-like uses. Basswood is used as a core wood for veneers and fills the need of all sorts of behind-the-scenes cabinet-making requirements. Beyond these secondary wood applications, it's used in scale model building, as well.

Basswood is often employed as a core material in musical instruments, such as electric guitar bodies and sound boards for pianos. It's also used for millwork, moldings, and wood shutters (interior) in general construction. But there's one more sweet surprise when it comes to basswood's contributions.

HONEY. Okay, technically this isn't about the wood, it's about the flower of the basswood tree. The abundant nectar from basswood flowers is a favorite of bees. The honey that's made in the process has a unique aroma and flavor. This honey is marketed as basswood honey and sought out by many for its distinct flavor.

A couple of cautionary notes about basswood and exterior use. If the wood is painted and maintained like you see in the whirligig below, it should be fine. But the material is not very rot resistant on its own. I would not advise using basswood as a post or pole, or in any setting where it's in direct contact with the ground.

CARVING AND CUTTING. Oh, yeah, we were talking about carving. Of the handful of woods that are considered good for carving, basswood sits at the top. It's well-behaved grain slices off in a fluffy manner that leaves you feeling like you could make anything out of this compliant wood.

Prior to carving, you often shape the piece with a coping or scroll saw. Basswood's fine grain is very agreeable to both methods of cutting.

When cutting or shaping basswood with other power tools, you'll want to make sure all bits and blades are sharp. Basswood's dense makeup means that it's prone to burn marks from dull tools. The upside here is that basswood sands very well, so the stray burn marks are easily removed. Drilling and screwing isn't a problem either. When all is said and done, the versatility of basswood is a pleasant surprise. W

– Erich Lage

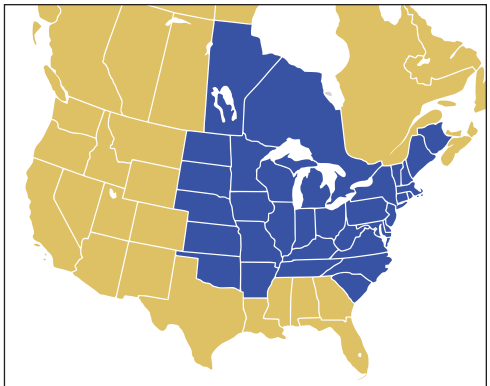

Basswood grows in these 34 states and provinces

With sharp tools, basswood is a joy to carve. Its tight, straight grain yields to carving tools like a hot knife through butter.

A Closer Look: PUTTING BASSWOOD TO USE

This hand-carved whirligig made of basswood is a great yard ornament. The wood machines and takes paint very well.

The blade of this pizza peel is the call to duty for basswood. Its stable, straight grain is lightweight and easy to handle.

Inlay is the role basswood plays in the making of this demilune table. It adds a crisp contrast to the top of the table.

Tips for better Slots & Grooves

Most of the time, when I need to create a slot or groove, I turn to my table saw equipped with a dado blade. This works great when the cut runs all the way through the workpiece from end-to-end. But what do you do when you need to make stopped or hidden grooves and slots? Well, the answer for me is to rely on my router table.

There are two types of stopped cuts that are tailor-made for making at the router table — those that extend through the thickness of the workpiece (slots), and those that are hidden (grooves). First, I'll take a look at making slots.

▲ Define the ends of the slot by drilling holes at both ends. The fence ensures proper alignment to the workpiece.

DEFINING THE SLOT. A simple straight-cutting bit is perfect for making a stopped slot (or groove). But before heading to the router table, its best to define the ends of the slot at the drill press. Choose a drill bit that matches the slot width and drill the holes (left photo). Now, when you move to the router table, you'll have clear starting and stopping points.

THE SETUP. Begin the setup by dropping one of the holes you drilled in the workpiece over the router bit. You can then lightly butt the router fence against the workpiece and lock it in place. The fence will guide the cut from one hole to the other.

But before turning on the router and starting the cut, there's one more thing to consider. Depending on the thickness of the workpiece, you may need to rout the slot in multiple passes, raising the bit after each pass. You can see what I mean in the two Figures above. Particularly for hardwoods, you shouldn't try to remove more than about ⅛" of material in one pass to avoid burning the wood or bogging down the router.

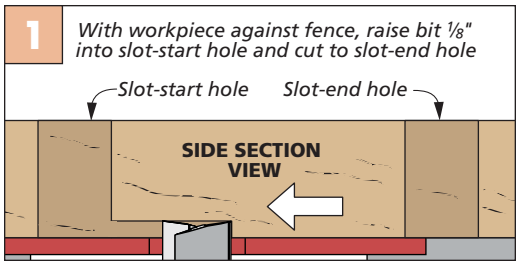

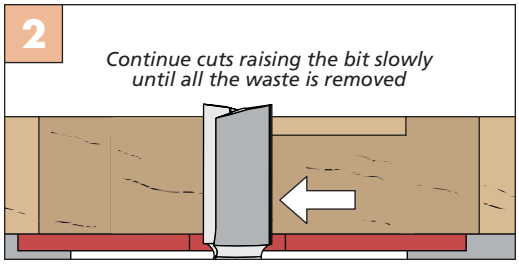

Also, if the slot needs to be wider than the widest straight bit you have, you'll need to flip the workpiece around between passes and possibly reposition

the fence to widen the slot in multiple passes (Figures 1 and 2 at right), in addition to raising the bit between passes.

Here again, the router fence plays a critical role in this operation. You'll want to set the fence so the workpiece is flush against the edge, with one of the predrilled end holes over the bit. Then, with the workpiece flat on the table, turn on the router and run the workpiece to the stop hole at the other end before rotating the piece and making the next pass.

HIDDEN GROOVES. But what do you do when the groove doesn't extend all the way through the workpiece? You can't drill holes through the workpiece to define the starting and stopping points. Here again, the router table will do the trick. But you need to do some careful setup work for success.

SHORT PIECES. For short workpieces, the best course of action is to use a couple of stop blocks clamped to the router table fence. This creates a positive starting point and stopping point.

To prepare for this setup, start by marking the location of the groove on the workpiece in a place that will be visible during the cut. This may require transferring layout marks around an edge, as shown in Photo 1. Here, I'm setting up for cutting a hidden groove on the edge of the workpiece.

Next, I use a drafting triangle to mark the edges of the straight bit on the router plate (Photo 2). You could also make these marks on the fence if the workpiece is laying flat. Now, use the workpiece to help position the stop blocks on the fence and clamp them in place as shown in Photos 3 and 4.

With the fence set in position as before and the router bit set to remove the appropriate amount of material, you can butt the workpiece against the start block and slowly lower it onto the spinning bit (Figure 5). Then it's just a matter of routing to the stop block.

LONG PIECES. If your workpiece happens to be longer than the router table fence, like on the legs for the linen press on page 42, you can omit the blocks and perform the same operation. When you lower the workpiece onto the router bit, be sure to have a firm hold on the workpiece and lower it about ⅛" to ¼" away from the start mark. You can then backrout to remove this tiny bit of material without fear of running past the end of the groove.

The next time you need to make through or hidden slots in a project, remember that the router table excels at this operation. Just be sure to use a careful setup and you'll create precise slots and grooves every time. W

— Robert Kemp

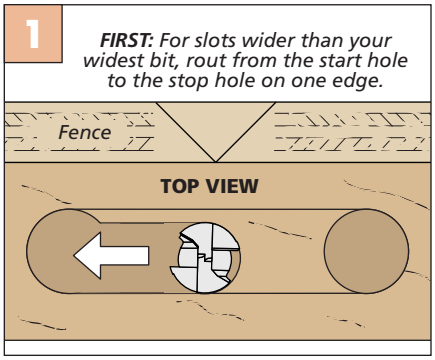

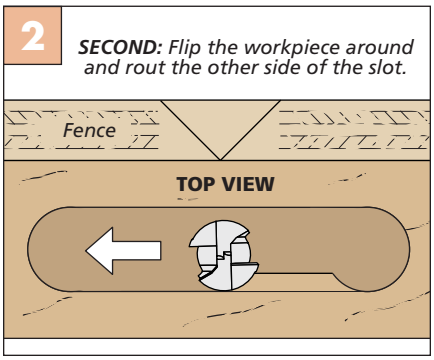

▲ Depending on where the groove is located, it may be necessary to transfer layout lines around a corner.

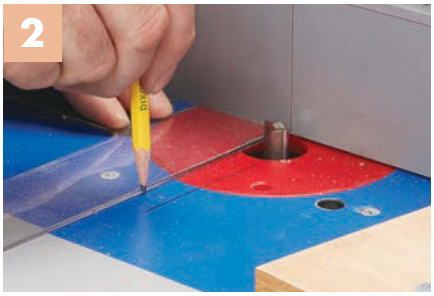

▲ Marking the edges of the bit on the router table (or fence) helps to determine where to start and stop the workpiece.

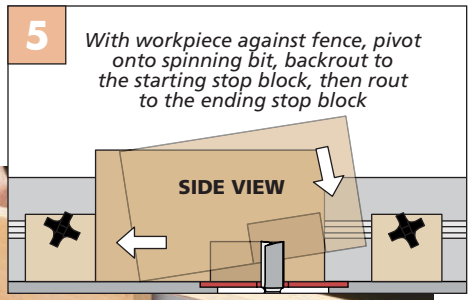

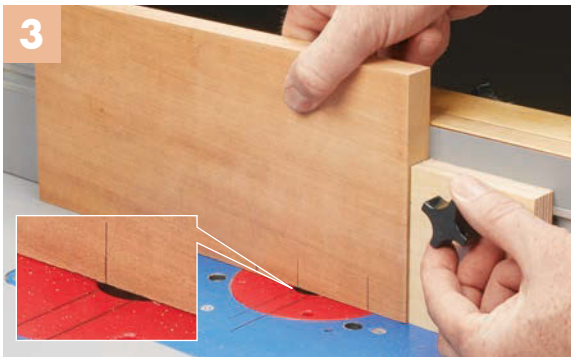

▲ Position the workpiece so the layout line that shows the starting point of the groove lines up with the mark that represents the front edge of the bit and tighten the stop.

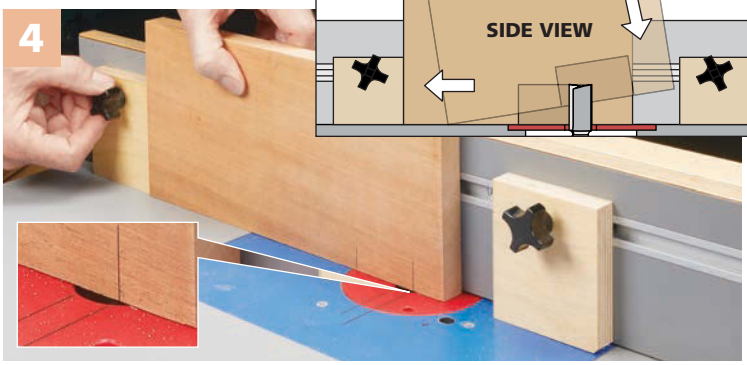

▲ With the first stop block in place, slide the workpiece over to line up the end-of-groove mark with the trailing edge of the router bit. Then, secure the stop block as before. Figure 5, above, shows the rest of the process.

great gear

Specialty Scrapers

The humble and economical card scraper was a "sustainable" tool before sustainability was cool. Scrapers save money in that you can renew their cutting edge time and time again when they get dull from use. Sandpaper provides similar results, but compared to scrapers, it's a costly alternative. Here's a brief introduction to some scrapers that go beyond the basic card scraper.

The micro set of scrapers from *Woodcraft* come in handy when cleaning up moldings and trim.

If you want to buy any of these, there's information in Sources on page 67.

CUSTOM SHAPES. There are commercially made scrapers that'll save you the time and bother of coming up with custom shop-made ones. The micro set that's shown at left gives you options for preparing wood for finish. The set of four are miniature versions of common card scrapers you might already have.

If you're cleaning up molding on a larger scale, and you need to work with a radius of a specific size, the convex and concave scrapers from *Woodcraft*, in the main photo, are just the ticket. Both these sets of specialty scrapers are sharpened in the same manner as card scrapers.

CHAIRMAKER'S SCRAPER. Moving a step beyond the card scraper category, you have what's called a chairmaker's scraper. This tool is designed to help with the organic work of making spokes, round tenons, and other duties called for in chairmaking.

This scraper starts out with a thick piece of high carbon steel for the blade.

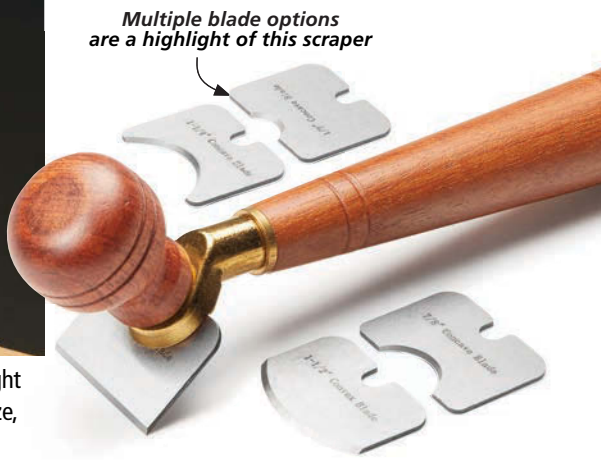

▲ The chairmaker's scraper shown here is from *Woodcraft*. It comes as a set with a straight blade and the four shaped blades. If you're looking for a scraper that you can customize, but is a little more aggressive than a card scraper, this is the tool for you.

The blade has a notch that keys into the handle of the scraper. The set shown in the photo above comes with extra blades that are milled to specific convex and concave shapes. You also have the option to create a custom profile with one of the replacement blades.

The handle of the scraper, combined with the knob that sits above the blade, lets you put a lot of downward pressure on the scraper. This tool is perfect for all manner of shaping and smoothing tasks.

CARBIDE SCRAPERS. There are three tools from *Bahco/Sandvik* to consider (photos at right). They all have handles that hold a replaceable blade, like the scraper we just looked at, and the biggest one has a pressure knob, also. But here the blade is totally different, it's a carbide scraper blade.

Being made of carbide, they stay sharp for a long time. But they can't be shaped and dressed like a traditional scraper.

▲ Removing dried glue is just the tip of the iceberg when it comes to what carbide scrapers can do. These scrapers are available from *Lee Valley* and *Woodcraft*.

Although the blades are considered disposable you don't have to throw them away. With a diamond stone of 600- to 1000-grit and some lapping fluid, you can extend their life (photo at right).

The one caution about using carbide scrapers that I would offer is to go slow with even pressure when you first use these tools. These sharp blades will quickly tear and gash a piece of wood.

LAST BUT NOT LEAST. A unique carbide scraper to consider is the "Skraper" from *Benchcrafted*. It has a carbide block welded to a metal blade that's attached to a wood handle. The wood handle is angled to the metal plate. This lets you hold the scraper dead flat to the surface that you're working on without your hand getting in the way of what you're doing. The edges of the carbide block give you eight crisp options when it comes to scraping wood. Digging in nooks and crannies, and burrowing into tight spaces are all in a day's work for this handy tool.

After looking at the options here, I'm sure you'll agree that the term "just scraping by" takes on a new light. W

—*Erich Lage*

▲ A diamond plate and some lubricant is the best way to bring a crisp, sharp edge back to a carbide scraper blade.

◀ The versatile Skraper from *Benchcrafted* is an ingenious tool that quickly becomes a best friend in the shop.

Frame & Panel Dowel Joinery

Recently, a friend asked me to help make some doors to enclose a bookcase in his family room. Without a lot of woodworking tools or expertise, he wanted to know his options. I suggested making the doors with dowel joinery.

One of the appeals of dowel joinery is the low cost of entry. Most people already have some kind of drill — even a small cordless drill works well for this task. The photo below shows the other items you need. At the heart of it is a doweling jig. You can find jigs that range from simple to fancy. I like the *Rockler* jig because of its low cost and ease of use.

The one I'm using here is for ¼" dowel joints. The drilling guide is designed to center the holes on ½"-thick stock. That doesn't mean it's limited to ½" material. It just means the dowels will be off center, which doesn't affect the strength.

The other piece of equipment is a bit. Common twist bits do the job, but I've been upgrading to brad-point bits for other drilling tasks. And I find that these create clean, consistent holes with a doweling jig, especially in end grain.

To complete the joint, you'll need dowels that match the holes. I prefer the spiral-fluted dowels like you see in the photo. The flutes allow excess glue to escape but offer more smooth surface area compared to straight-fluted dowels for a stronger glue joint.

LAYOUT. Since you don't need to account for joinery, cutting parts to size is simply a matter of making clean, square cuts (upper left photo on the next page). Now you're ready to start making the joints. For this step, arrange the pieces in their final orientation. Then use a square to mark the location of the dowels across the face of each piece, as in the upper right photo on the next page.

How you mark the parts depends on the jig. For this one, a single mark can serve as a centerline for drilling two holes. (The fence of the jig also has centerlines for each guide hole.)

▲ The *Rockler* doweling jig has a clear, acrylic fence with three layout lines for easy alignment. Upgrading to a brad-point bit creates smooth, accurate holes. Spiral-fluted dowels provide more wood-to-wood contact. Turn to page 67 for sources.

HOW MANY DOWELS? The more dowels you include in a joint, the stronger the assembly is overall. At a minimum, the joint should have no fewer than two dowels. This prevents the pieces from rotating. Space the dowels at least a dowel width apart from each other.

For doors, you also need to consider how a panel will be installed when you lay out the holes. I often rout a rabbet on the back face of the door to accept a panel. So I locate the dowel holes so I won't rout into them after assembly.

SET UP THE BIT & JIG. Setting up the bit and jig comes next. What's important here is the depth of the hole. It needs to be slightly deeper than half the length of the dowel. This way the dowel won't bottom out when you assemble the joint. And actually, a little extra depth provides a pocket for excess glue.

Don't forget to take into account the thickness of the dowel jig. You can use a stop collar, but a piece of masking tape works just as well as a depth stop.

Clamping the workpiece — in a vise or to a worksurface — keeps it from shifting. Then align the jig with your layout marks and clamp it to the workpiece, as you can see in the main photo on the previous page and the lower left photo.

DRILLING DOWEL HOLES. In keeping with the layout and setup, drilling the dowel holes is pretty clear-cut. All you do is insert the bit into one of the holes in the jig. The guide holes on the dowel jig help keep the bit straight, but that doesn't relieve you of any role to play. Concentrate on keeping the drill vertical and drill down until you reach the tape depth gauge.

▲ To end up with a tight-fitting joint, the ends of the parts need to be cut to accurate and consistent lengths.

▲ Use a square to mark a straight line across both pieces to make aligning the doweling jig easier.

Retract the bit while it's spinning to clear the chips. Repeat the process to drill all the holes at each joint.

More than likely, there will still be some chips down in the holes. Those need to be removed in order for the joint to come together tightly.

ASSEMBLY. Having drilled the holes, you're now ready to grab the glue bottle and clamps. The main strength of the joint is in the dowels, so that's where your attention should be focused. Dribble a little glue down the hole. Then paint a little glue on half of the dowel.

Once you insert the dowels into the holes, you can brush on a thin coat of glue to the exposed portion of the dowel, as shown in the lower right photo.

I also like to apply some glue to the joint faces. Sure, this is an end-grain butt joint, so the glue isn't adding much strength. I use the glue here as a filler to hide any tiny cosmetic gaps in the joint.

When you apply the clamps, be sure the pressure is centered on the thickness of the parts. This keeps the frame flat and the joints tight on both the upper and lower faces.

To turn the frame into a door, all you need to do is rout a rabbet in the back face to form a pocket for the panel. The result is a strong and sturdy door that took very little time to make. W

—Phil Huber

▲ Fold a piece of masking tape around the drill bit to create a flag that acts as a depth stop. When the flag brushes the top of the jig, you know the hole is at the correct depth.

▲ A little glue in both the hole and on the dowels ensures a good joint. It's also a good idea to apply a light coat of glue on the end of the rail to seal the visible joint edges.

Weekend Project

Desk Lamp

Build this modern-looking desk lamp that'll have people asking, "How'd you make that shade?"

When I first saw the concept drawings for this desk lamp, I was pretty skeptical. I didn't think that we'd be able to pull off the construction of the round, "louvered" lampshade using common woodworking tools, or easy-to-replicate methods. But I was quickly proven wrong on both counts.

In fact, the shade was so simple to build, you may find that you can turn out a couple of these desk lamps in a single weekend. The trick is to start with a couple of squared-up blanks. You then cut all of the joinery before "bending" the shade halves together to form a round shade. It may sound difficult now, but I'll walk you through the entire process.

The remainder of the parts for the lamp are just as easy to make. And because of the small size of this project, it's the perfect place to showcase some attractive wood. For the shade, I would recommend a lighter-colored wood so as not to "mute" the light from the bulb. I chose beech for my shade and walnut for the rest of the lamp.

Plus, you needn't worry about the electrical side of this project. The only pieces of electrical hardware required are a two-wire cord with an inline switch and an inexpensive, phenolic light bulb socket. Making the connection between the two is simple. You'll find more about the hardware in Sources on page 67. Now, take a look at the next page to get started.

Starting the SHADE BLANKS

As promised, you'll start construction on the desk lamp by cutting a couple of blanks to size for the two halves of the lampshade. The drawings at right provide the dimensions you'll need.

Be sure the grain orientation runs in the direction shown. This will ensure the parts bend to their final shape later on without breaking.

SIMPLE JOINERY. The first thing you'll need to do with your blanks is to cut a pair of dadoes on the inside face of each one. These dadoes house the two circular shade retainers that help to hold the shade in position. For consistency, I made these cuts at the table saw using the miter gauge to hold them square to the blade and the rip fence as an edge guide (Figure 1).

Next, each blank needs a rabbet cut along both long edges, but on opposing faces. These rabbets allow the two shade halves to interlock when bent, forming the completed shade. I stayed at the table saw for this step as shown in Figure 2, at right. Here, you can partially bury a dado blade in an auxiliary rip fence to dial in the correct depth.

To soften the look at the top and bottom of the shade, I chamfered the ends of each blank (Figure 3). The main photo shows what this will look like when the shade is finished. Be sure the blanks are positioned correctly to only chamfer the outside ends. Then tilt the saw blade 45° and make the cuts.

The final step before moving on is to drill a couple of holes along one edge of each blank. When the lampshade halves are assembled later on, these holes hold a couple of short dowels that act as attachment points for installing the two uprights.

For accuracy, I turned to the drill press as shown in Figure 4 to make these holes. You'll want to be sure you drill the holes in the same edge on each shade blank. With this portion of the blanks complete, turn the page to see the unique method for creating the louvers.

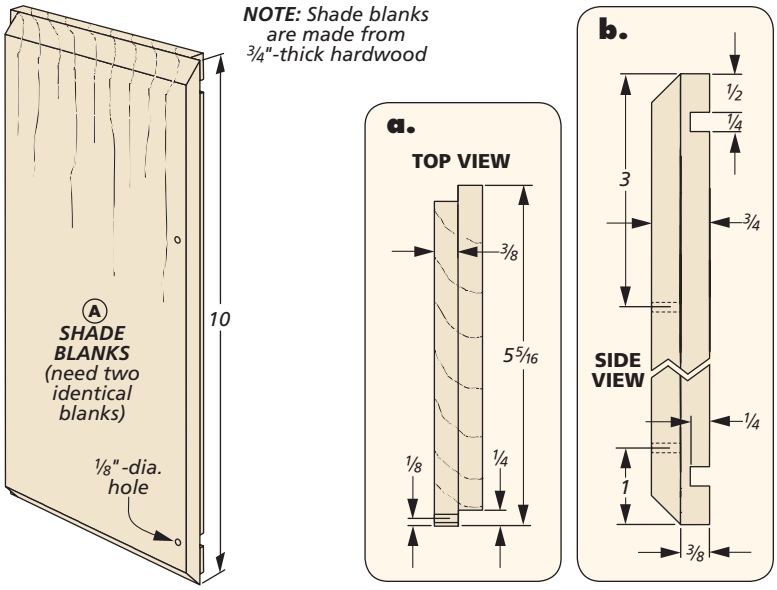

How-To: MAKE THE SHADE BLANKS

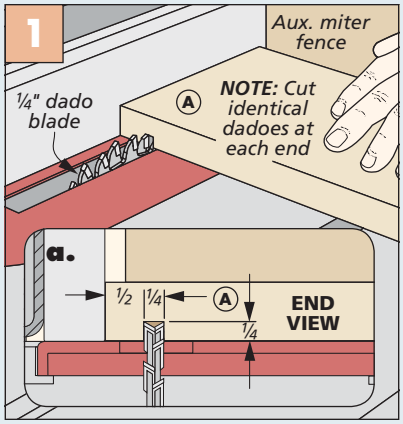

Dadoes for Retainers. Use a dado blade in the table saw to cut the dadoes for the shade retainer rings.

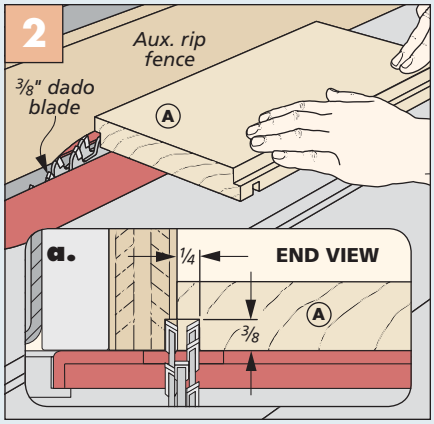

Rabbets. Widen the dado blade and cut the rabbets on the long edges of each blank on opposite faces.

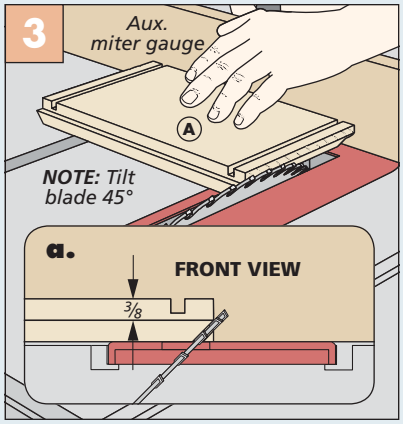

Chamfer Ends. Tilt the table saw blade 45° to chamfer the ends of both shade blanks.

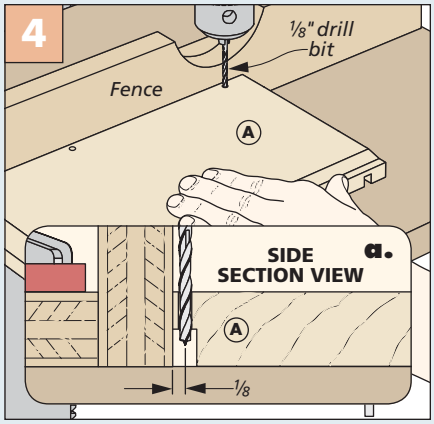

Holes for Dowels. Use the drill press to make the holes along the shade blank edge for the dowels.

Completing the SHADE

Now that all of the joinery is done on the two lampshade halves, you can make the kerfs that allow the blanks to bend to their final shape. From there, you'll move on to making the two shade retainers. These are nothing more than thin hardwood discs that slip into the dadoes in the shade openings and help maintain the round shape of the shade. These won't be added until after the shade is assembled.

The base and two-piece cord column wrap up this portion of the lamp. After that, you'll add the electrical hardware and do a little assembly work. But for now, head to the band saw to complete the shade blanks.

LONG, THIN KERFS. There's nothing complicated about this next operation. Essentially, you're cutting kerfs from opposite ends of the blank, alternating ends between cuts, to create a zig-zag effect in the blanks. Detail 'b' at right provides all the dimensions you'll need to cut the kerfs in each blank.

As you can see in Figure 1 below, I used the fence on my band saw as a guide and a reference point for making each cut. I also marked a line 1" in from both ends to represent the stopping point when making the cuts. Start in the center and make the first cut. When complete, shut off the saw and wait for the blade to stop before backing the workpiece out of the blade. Now, move the fence 3/16" for the next cut, rotate the blank to the opposite end and make the next pass. You'll make nine cuts from one direction and ten from the other (detail 'b').

ASSEMBLE SHADE. Depending on how cleanly your band saw blade cuts, you may have to do a little sanding between the newly created "louvers."

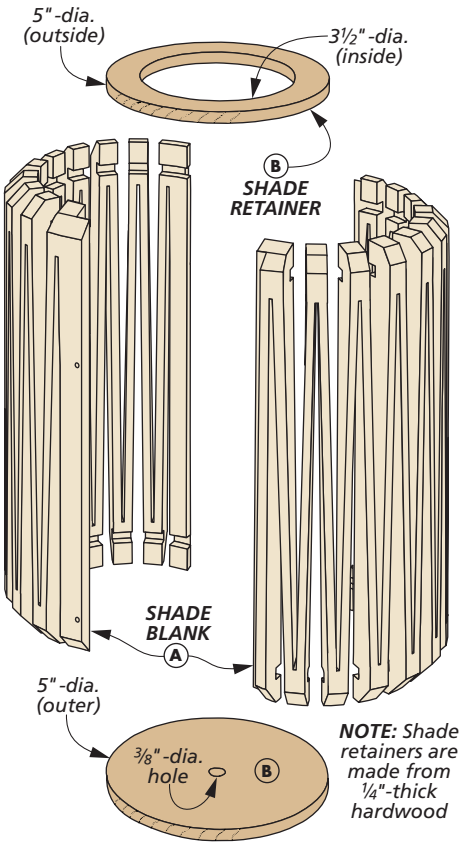

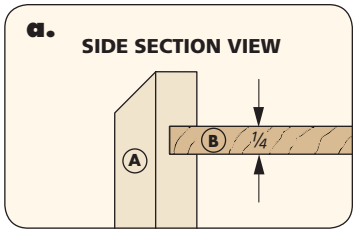

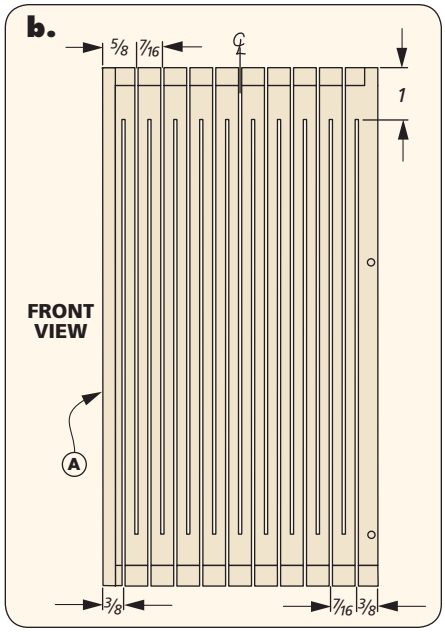

How-To: CREATE LOUVERS & ASSEMBLE THE SHADE

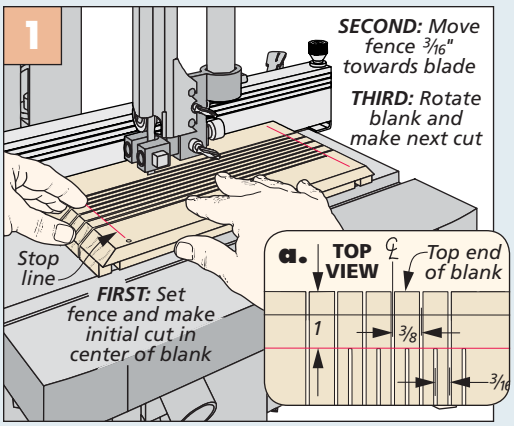

Opposing Kerfs. Using the band saw fence as a guide, making alternating cuts from each end of the blank, moving the fence between.

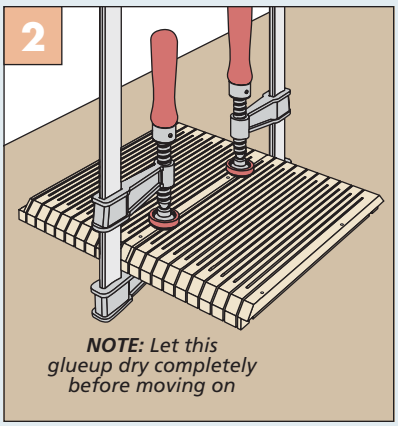

Staged Assembly. Overlap the rabbets on the shade blanks and glue the edges together.

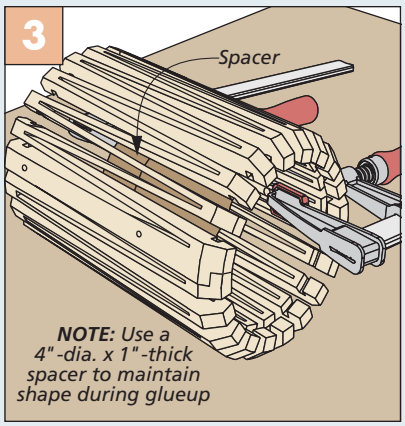

Final Clamp. After the glue dries on the first edge, wrap the halves and glue the rabbets on the other edge.

I then assembled the two shade halves as shown in Figures 2 and 3 on the previous page. Make sure the glue sets up completely after the initial glueup in Figure 2. You can then bend the shade to its round shape and clamp the other side. You'll find there's plenty of "springiness" to easily bend the shade.

RETAINERS. Flip over to Shop Notes on page 64 to see how I made the two shade retainers. These will be installed in the shade during the first phase of assembly later on.

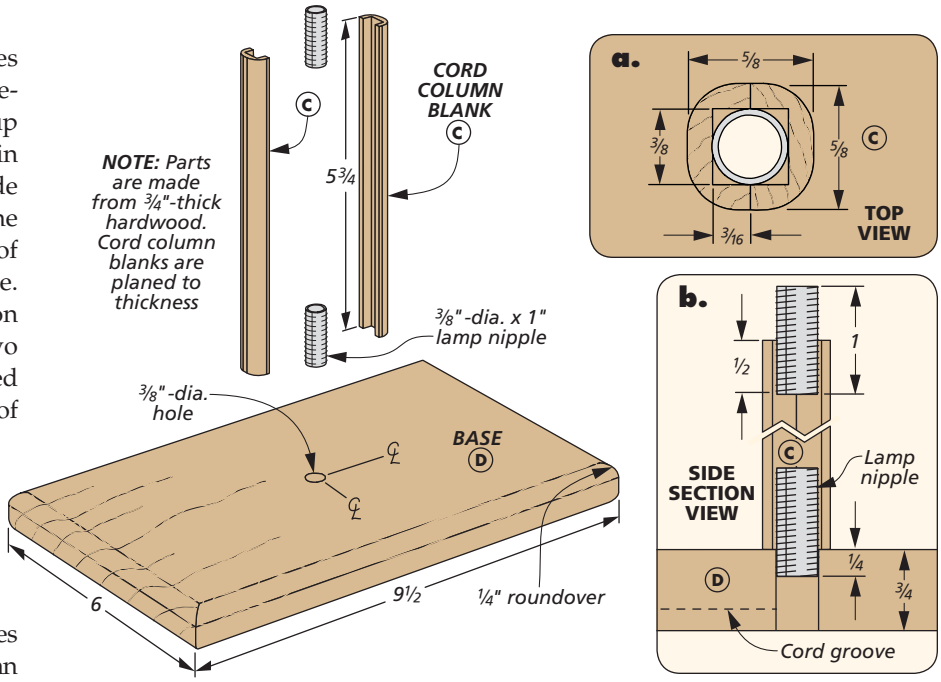

COLUMN & BASE

Finally, you can tackle the two-piece column and the sturdy base. The column acts as a conduit for hiding the electric cord. A couple of lamp nipples are epoxied into either end of the column — one for attaching the socket, and the other to align the column with the base.

COLUMN FIRST. Making the column starts by cutting the two blanks to size. You can then simply cut a groove down the center of each (Figure 1), glue the halves together, and round over the outside edges (Figure 2).

BASE NEXT. After cutting the base to size and drilling the center hole, head to the router table to create the channel on the bottom for the cord, as shown in Figure 3. I then rounded over all of the edges (Figure 4) before using epoxy to glue the nipples into the column and the base.

How-To: MAKE THE COLUMN & BASE

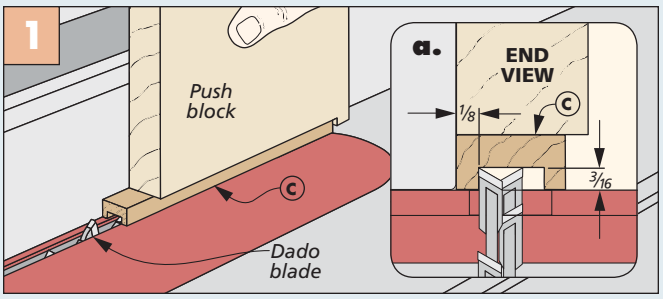

Dado Blanks. After cutting the column blanks to size, use a dado blade to cut the grooves down the center in two passes. Turn the blank after the first pass to center the groove.

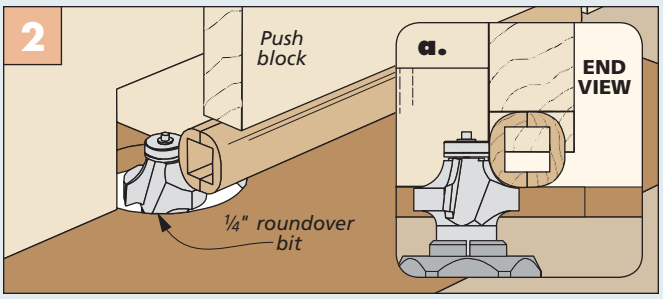

Round the Edges. After gluing the two cord column blanks together, round over all four edges at the router table. Use a push block again to keep your hands away from the bit.

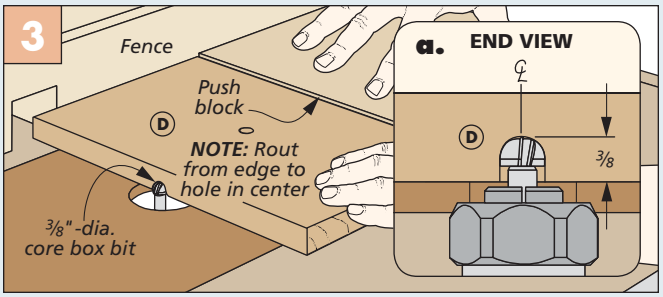

Groove for Cord. Use a core box bit in the router table to make the groove on the underside of the base for the light cord. Rout in two passes, raising the bit after the first pass.

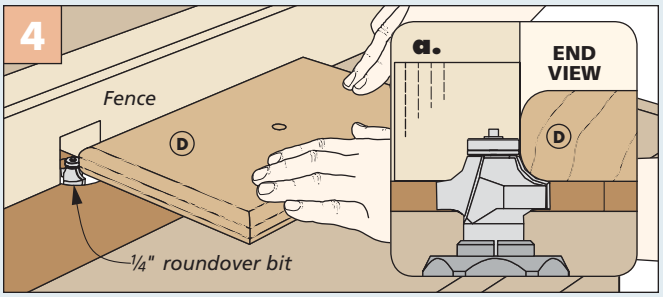

Round Over Base Edges. You'll stay at the router table to round over all four edges of the base. Be sure to round over the bottom, as well as the top edges.

Assembling the **LAMP**

You're well on the way to wrapping up this desk lamp project. Some final assembly is all that's left before making the two hardwood uprights that support the shade. I opted to make the uprights last because it's easier to mark their location on the base after the hardware and the shade are in place.

I also applied a finish to the individual parts at this point (check out Sources on page 67). This avoids the need to disassemble the lamp after adding the hardware. After applying the finish, you can add the cord and socket.

CORD & SOCKET. The cord I used on my lamp has an inline switch located about 18" away from the end. Thread the end of the cord through the base, cord column, lower retainer, and the housing on the bottom of the socket as shown at right. The threaded housing on the bottom of the socket I used was long enough to secure the lower shade retainer to the column when threaded onto the nipple. If yours isn't, you may need to thread a nut onto the nipple (details 'a' and 'b').

Now, the two wires are attached to the socket terminals following the directions provided with the socket. With the wires securely in place, thread the socket onto the exposed nipple (detail 'b'). Be sure to let the cord turn freely in the column as the light bulb socket is attached to ensure it doesn't become kinked.

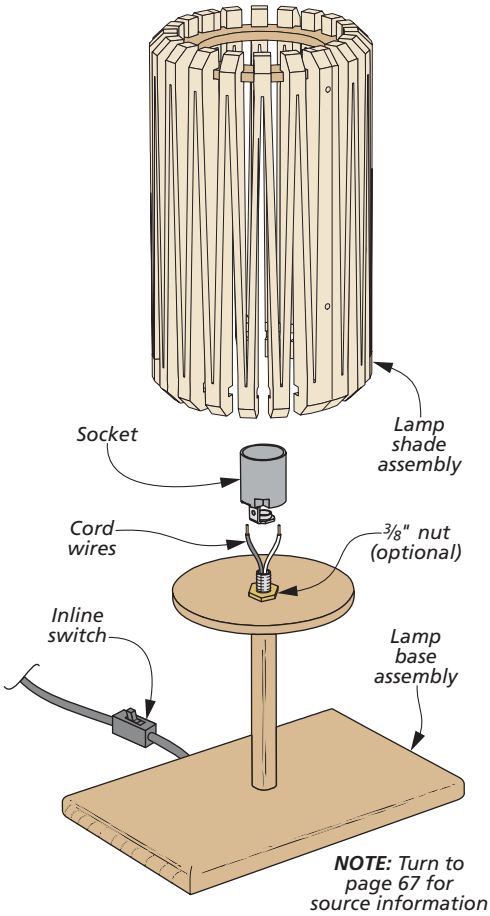

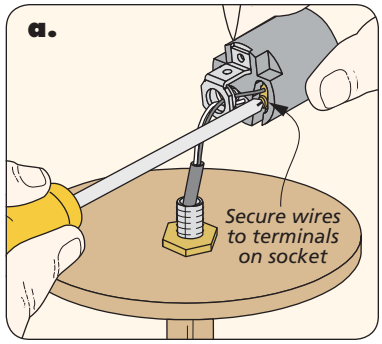

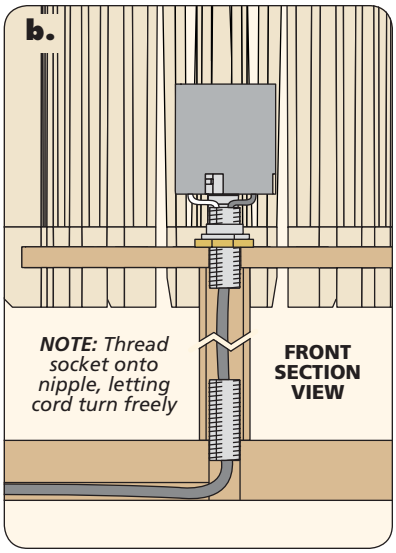

ATTACH SHADE. Because of the springiness of the shade, securing it with the retainers is a simple process. I started by spreading the top of the shade open just enough to slide the upper retainer in place. Then do the same for the lower retainer. Because the shade will pull back into shape, no glue is needed to hold the shade to the retainers. Now it's time to add the two uprights that provide the stability for the shade.

FINAL DETAILS

Beyond stability, the two uprights also create a clean, streamlined look on the

▲ Several styles of bulbs are available to fit this lamp. These vintage-look, decorative bulbs work well.

Materials, Supplies & Cutting Diagram

A	Shade Blanks (2)	3/4 x 5 5/16 - 10
B	Shade Retainer Blanks (2)	1/4 x 6 - 6
C	Cord Column Blanks (2)	5/16 x 5/8 - 5 3/4
D	Base (1)	3/4 x 6 - 9 1/2
E	Uprights (2)	1/2 x 1 1/2 - 14

- (1) Servalite Phenolic Socket
- (2) 3/8"-dia. x 1" Lamp Nipples
- (1) 6' Two-Conductor Cord
- (1) 8 1/2" x 12" Shoji Paper
- (1) 40 Watt Light Bulb
- (2) #6 x 2 1/2" Fh Woodscrews
- (4) 1/8"-dia. x 1" Dowels
- (1) 3/8" Nut (optional)

3/4" x 6" - 24" Beech (1.0 Bd. Ft.)

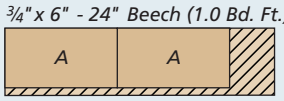

3/4" x 6 1/2" - 36" Walnut (1.6 Bd. Ft.)

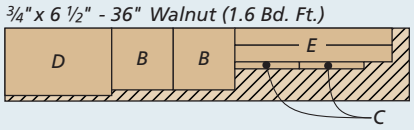

desk lamp. While the parts themselves are fairly straightforward to make, there's a slight trick to installing them in the proper position against the shade and base. Next, I'll walk through that process in detail.

CUT TO SHAPE. Detail 'a' at right provides the dimensions you'll need for cutting the uprights to shape. For this, I made a trip to the band saw (Figure 1, below). Stay to the waste side of the layout line and clean up the edge with sandpaper.

I also softened the outside edges of each workpiece at the router table as shown in Figure 2. Here again, I applied a finish to the uprights before adding them to the lamp.

ATTACHING UPRIGHTS. Positioning the uprights against the shade is the next step. To do this, I used a couple of short nails with the heads clipped off and placed in the holes in one side of the lampshade (Figure 3). It's then just a matter of lining up one upright with the edge of the shade and pressing the upright against the nails. This will mark the position where the corresponding dowel holes need to be drilled.

With this completed, you can install the dowels in the shade and uprights (no glue yet). Then, take a pencil and mark the location of the bottom of the uprights on the base. From here, you can drill the holes in the base (be sure to counterbore them from the bottom). Now, add glue to the dowels and reassemble, driving screws into the uprights from underneath.

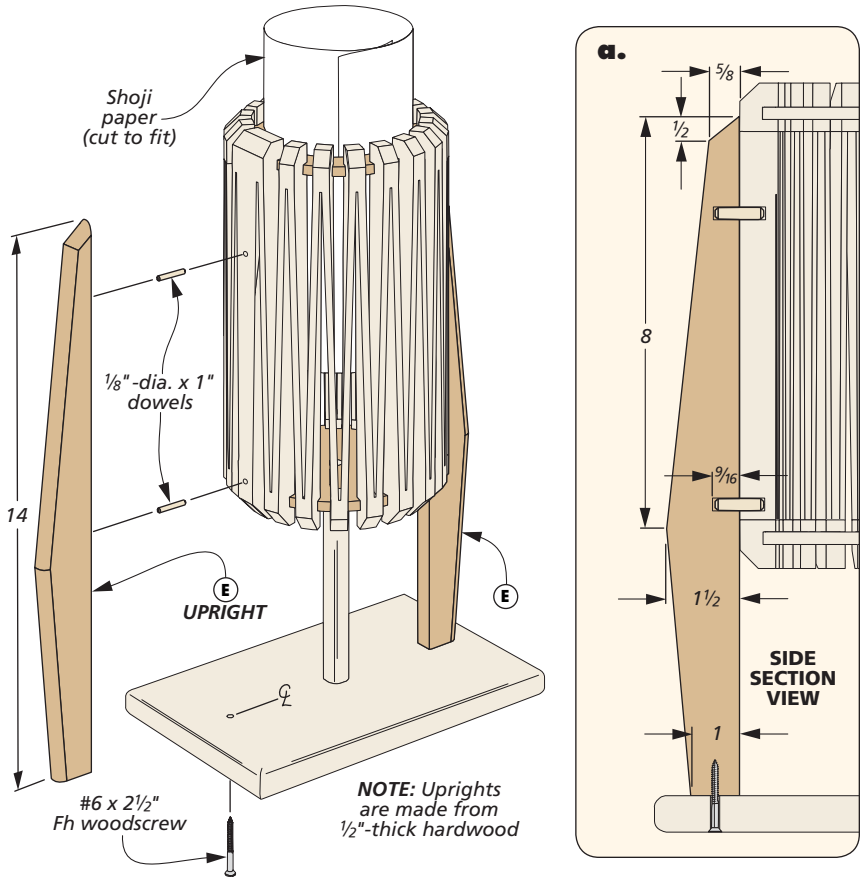

ADD SHOJI PAPER. In order to diffuse the light from the bulb, I added a piece of *shoji* paper that wraps the inside of the shade. Simply cut the paper to size and gently roll it into a tube by overlapping the ends so that it will just fit into the opening in the upper retainer.

The paper is stiff enough that it will spring back open once inserted. If the ends overlap slightly, you can simply hide the joint behind one of the uprights.

I opted for a decorative style light bulb with a vintage look, but several types would work (far left photo, previous page). With that in place, this project is ready to brighten your desktop. W

How-To: MAKE & INSTALL THE UPRIGHTS

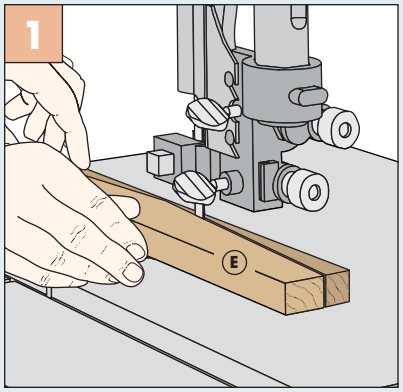

Cut Profile. Head to the band saw to cut the two uprights to size. Clean up the saw marks with sandpaper.

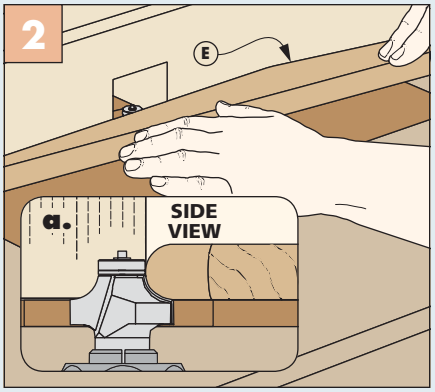

Round Over Edges. Ease the outside edges at the router table. Leave the bottom and inside edges crisp.

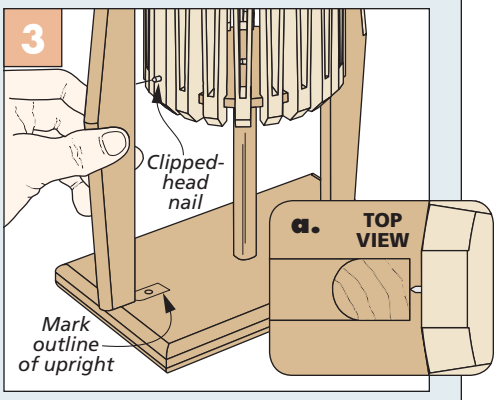

Locate Uprights. Use a couple of short nails as centers to locate the dowel positions in the uprights.

Weekend Project

Hand Plane

A simple design and a unique method of securing the blade makes building this plane an easy alternative to a traditional wood plane.

I have an incurable weakness when it comes to hand planes — especially wood planes. There's just something special about the look and "feel" of a wood-bodied plane.

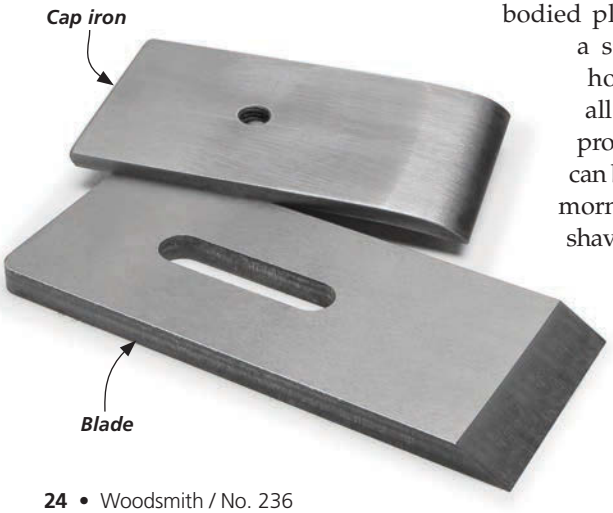

The problem is that making a traditional wood plane and fitting the blade correctly can be time-consuming work.

Several years back, *ShopNotes Magazine* featured this easy-to-build, wood-bodied plane shown here. It utilizes a straightforward method for holding the blade that takes all of the guesswork out of the process. It's so simple in fact, you can build the plane in the morning and be making shavings in the afternoon.

BLADE & IRON SET. I started with a 1½"-wide blade manufactured by *Hock Tools*, as shown in the photo at left. As with other *Hock* blades I've used, it's made of high-quality steel and holds an edge extremely well. And like most bench plane blades, it comes with a cap iron as part of a matched set. See Sources on page 67 for more information about where to buy this set.

But even a quality plane blade won't work well unless it's sharp. If you're not

Materials & Supplies

A	Front Block (1)	1 9/16 x 2½ - 2
B	Back Block (1)	1 9/16 x 2½ - 4½
C	Sides (2)	⅛ x 2½ - 7

- (1) 1½" Plane Blade w/Cap Iron
- (1) ¼" - 28 x 1¼" Cap Screw w/Washer

familiar with sharpening techniques, take a look at the article on page 60.

CORE. The logical place to begin this project is with the core of the plane. It consists of two wedge-shaped blocks, as shown at right. When the sides are added later, the blade fits in the opening created by the two blocks.

Both blocks start out as a single hardwood blank. I used a piece of hard maple. The thickness of this blank determines the width of the opening for the blade. To allow for some side-to-side blade adjustment, the blank is 1/16" thicker (1 9/16") than the width of the blade (1 1/2").

CUT BLOCKS. To provide clearance inside the plane for the shavings, the front block is cut at a 70° angle. The angle of the back block determines the cutting angle of the blade. For all-around use, I cut it at a 40° angle and then trimmed the block to length (Figure 1, below).

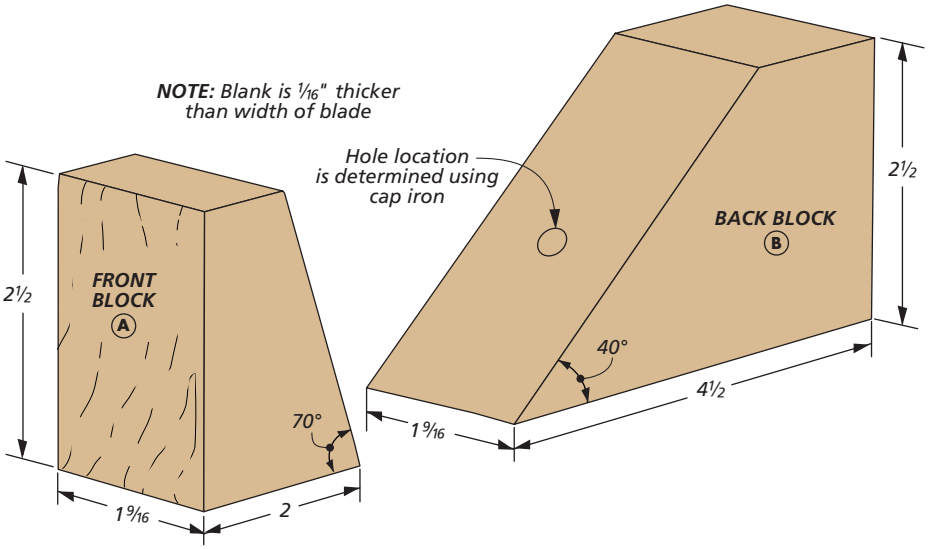

MOUNTING SYSTEM

The next step is to provide a way to mount the blade. This is where I took a slight detour from the traditional approach. Instead of a wood wedge that exerts pressure from above, the blade is "screwed" to the back block from the underside of the plane.

The secret is a socket head cap screw. It passes through a counterbored hole in the back block and into the threaded hole in the cap iron. Tightening the screw draws the cap iron tight against the blade and locks it in place.

EXIT HOLE. In addition to securing the blade with a screw, the procedure for locating the hole is also a bit unusual. The first step is to find the point where the drill bit will exit. To do this, position the cap iron so the tip is located just behind the cutting edge, as shown in Figure 2. Then mark the location of the hole with a brad point bit.

Once the exit point is established, the trick is knowing where to start drilling in the bottom of the block. This depends on the distance from the tip of the block to the mark. The idea is to clamp a stop block to the drill press fence the same distance away from the centerpoint of the bit (Figure 3). Then, with the back block upside down and the tip against the stop block, drill a counterbored shank hole.

How-To: SHAPE THE BODY

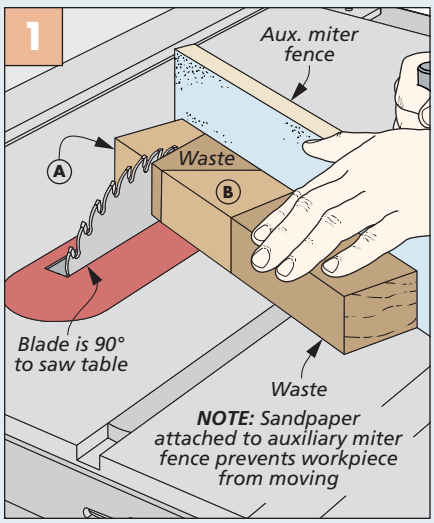

Cut the Blocks. From an oversized workpiece, cut the front and back blocks to length at the table saw.

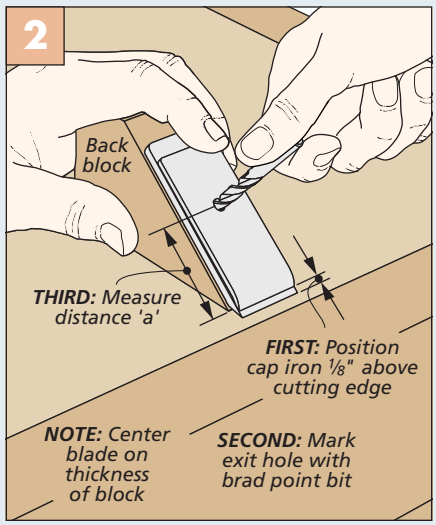

Locate Hole. Use the cap iron and a brad point drill bit to locate the hole in the top of the back block.

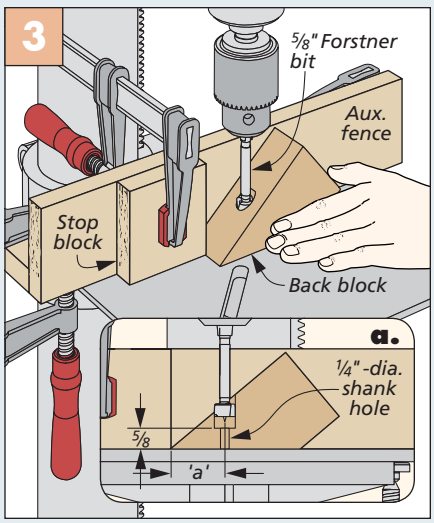

Drill Hole. Use an auxiliary fence and a stop block at the drill press to accurately drill the hole in the back block.

The SIDES

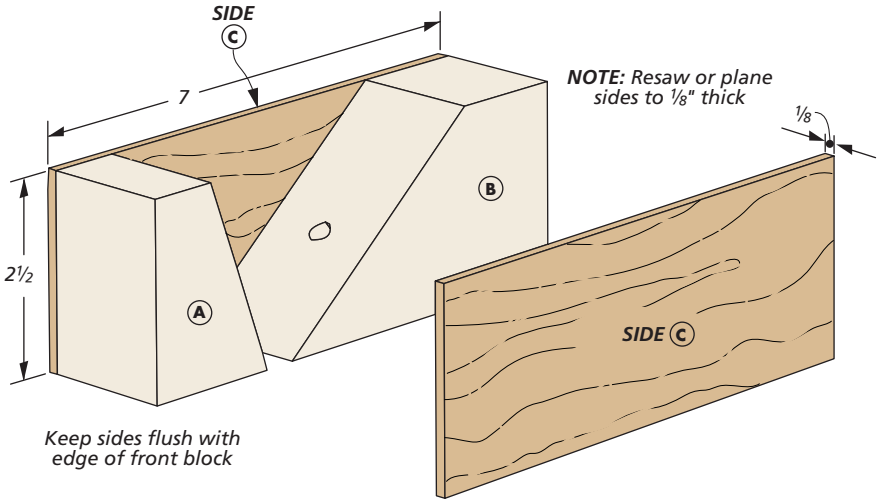

After completing the plane's core, work can begin on the sides of the plane. The two sides are simply thin strips of hardwood that sandwich the front and back blocks together.

Although any hardwood would work here, it's the perfect opportunity to experiment with an unusual or highly figured piece of wood. I chose a piece of curly maple for the sides on my hand plane.

Regardless of the wood you use, each side starts out as an ⅛"-thick blank that's cut to a rough length of 7", as shown at right. Attaching these blanks to the front and back blocks does two things. First, it creates the opening for the blade. Second, it forms the sole (bottom) of the plane.

FLAT SOLE. The sole keeps the blade a consistent distance from the workpiece. So in order to produce an even cut, it needs to be as flat as possible. To ensure that it's flat, I used the top of my table saw to align the bottom edges of the sides and blocks, as shown in Figure 1, below. Note that I used a piece of waxed paper to protect the top from glue squeezeout.

ASSEMBLY

To avoid having to align all the parts at once, I assembled the plane one block at a time. This makes it easier to check that the sides are straight and square.

FRONT BLOCK. I attached the front block first. After applying glue to the sides of the block, it's just a matter of clamping the sides around it so they're flush at the end (Figure 1).

THROAT OPENING. When the glue dries, you're ready to add the back block to the assembly. The position of this block creates an opening or "throat" in the sole of the plane for the blade, as shown in Figure 2a. The idea is to create a tight fit for now.

SET OPENING. An easy way to establish this opening is to use the blade and cap iron as a gauge. To do this, temporarily install the blade and cap iron set so the cutting edge is flush with the bottom edge of the back block and just touches the tip of the front block (Figure 2a). Later, you'll fine-tune the throat opening for making paper-thin shavings.

To attach the back block, apply glue to the sides of the block. Then spread the sides apart just a bit as you slide the block forward (Figure 2).

How-To: ASSEMBLE THE BODY

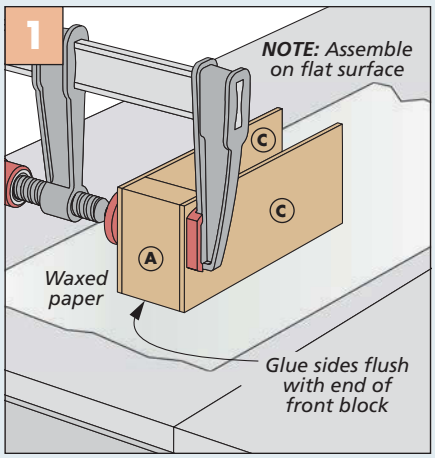

Staged Assembly. In order to keep the bottom edges flush, glue the sides to the front block on a flat surface.

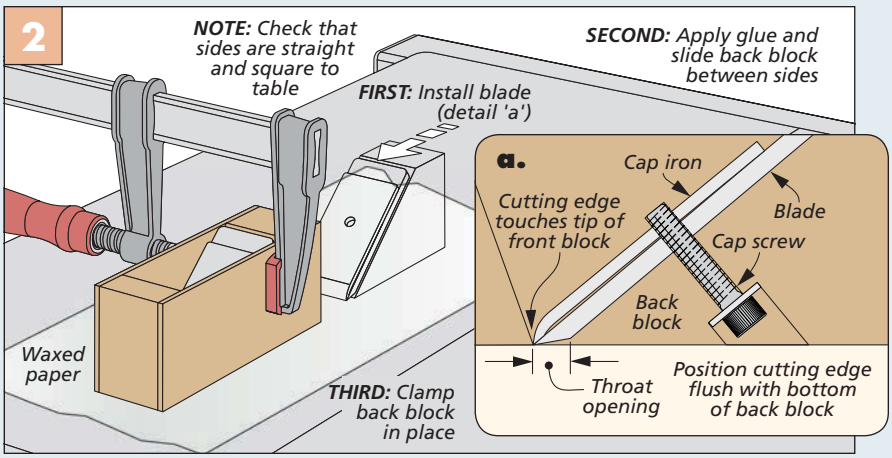

Adding the Back Block. Gluing the back block into the body determines the throat opening for the blade. Use the blade and cap iron as a gauge (detail 'a') to help locate the position of the back blocks

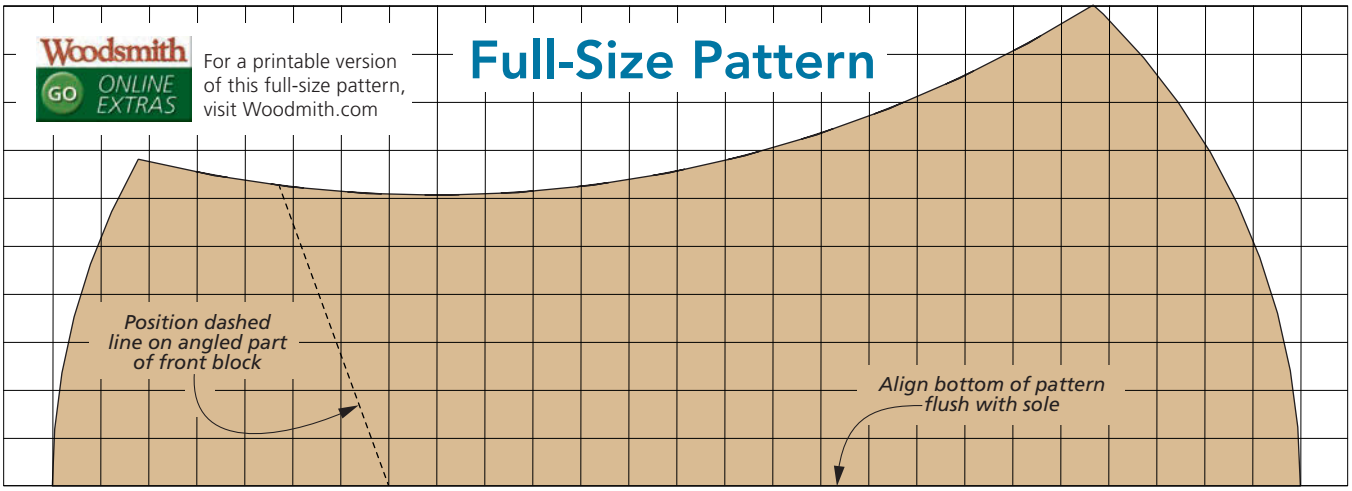

When the cutting edge of the blade touches the tip of the front block, clamp the block in place. Finally, remove the blade and clean up any glue that may have squeezed out.

SHAPING THE PLANE

With the sides in place, the next step is to shape the body of the plane. I experimented with several different shapes to find the most comfortable grip.

The one I liked best has a rounded back that fits in the palm of my hand. And the curve on the top of the plane lets me apply pressure without having my finger slip off the block. (See full-size pattern above.)

You can certainly customize the shape of your own plane. But if you want to use the pattern shown above without cutting it out of the magazine, you can go online to *Woodsmith.com* to download a printable pattern.

PAPER PATTERN. To position the pattern on the side of the plane, there's a dashed line representing the angled, inside edge of the front block. Simply line up this mark and attach the pattern to the side of the plane with a spray-on adhesive.

CUT TO SHAPE. With the pattern in place, the plane is ready to cut to rough shape. Start by cutting to within 1/16" of the line on a band saw. The details are shown in Figure 1, below. Then use a sanding drum on the drill press to sand up to the line.

CROWN THE ENDS. There's just one more thing to do to complete the basic shape, and that's to file the sharp corners off both ends of the plane to form a gradual crown (Figure 2). To raise the plane to a comfortable working height, I clamped it in a handscrew that's held in a vise.

SAND SMOOTH. All that's left to do is to sand the plane smooth. An easy way to sand the ends is to use a strip of sandpaper and "buff" the plane as if you're shining a pair of shoes, as shown in Figure 3.

How-To: SHAPE THE BODY

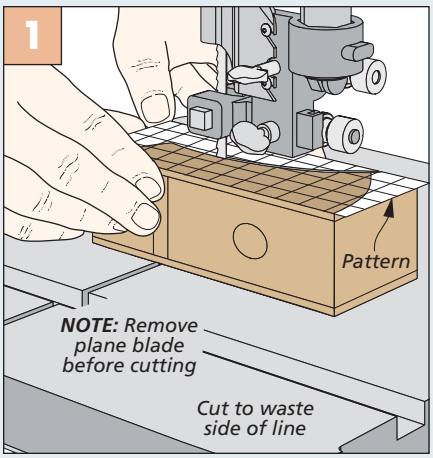

Cut it Out. Staying to the waste side of the pattern line, cut the body to shape. Then sand up to the line.

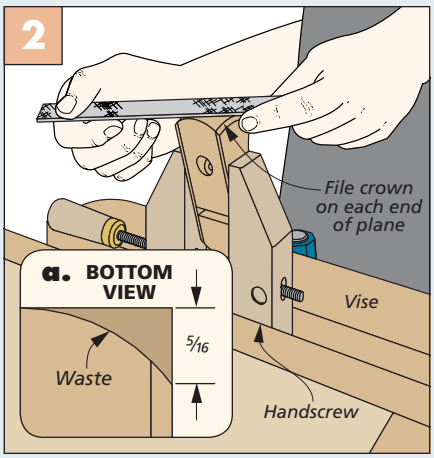

Hand Shaping. Use a file to shape the ends of the plane. Detail 'a' shows the shape you are aiming for on each end.

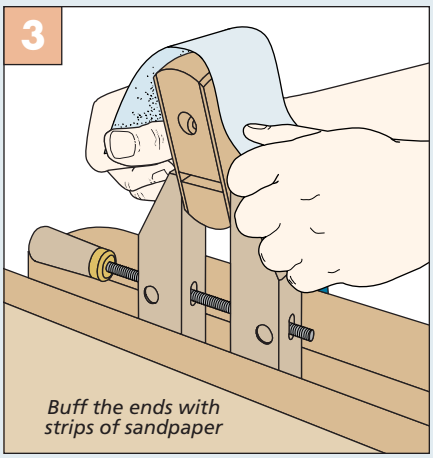

Hand Sanding. Cut several long strips of sandpaper in different grits. Then "buff" the ends of the plane smooth.

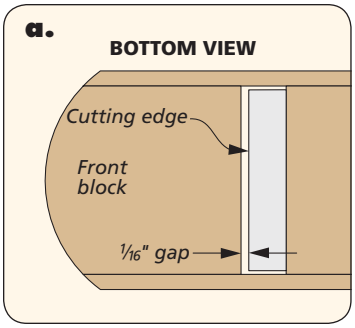

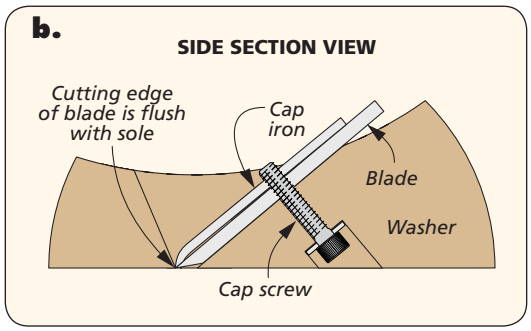

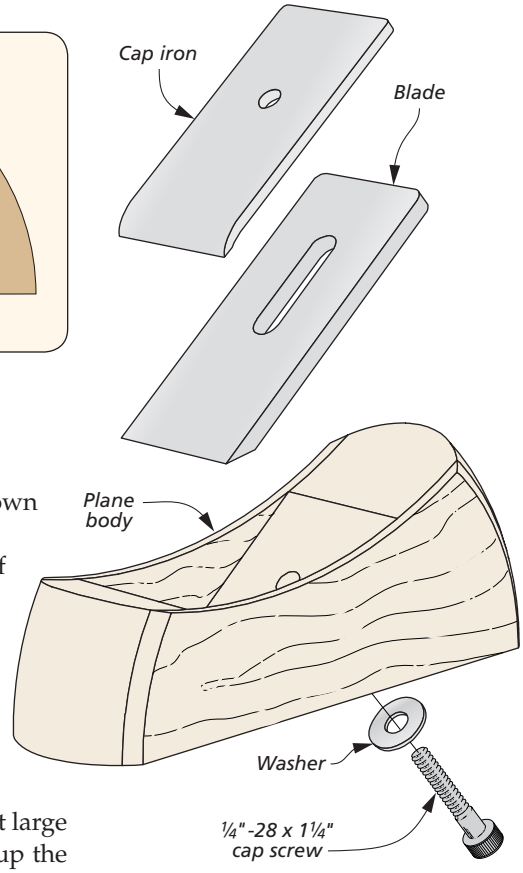

Tuning the **PLANE**

Like any plane (wood or metal), this hand plane needs to be tuned up before you can use it. This takes a little patience. But the satisfaction you'll get seeing thin shavings curl off a workpiece is worth the effort.

TRUE THE SOLE

The key to this tune-up is to "true" the sole (bottom) of the plane so it's good and flat. This does two things.

First, it ensures that the plane rides evenly across a workpiece, so you end up with a smooth, consistent cut. Second, it enlarges the throat opening for a proper-fitting blade.

SAND BOTTOM. To flatten the sole, I place a piece of fine-grit sandpaper on a flat surface (like a table saw). Note: To prevent the plane from rocking, clamp a board 90° to the saw table as shown in Figure 1, below.

Now it's simply a matter of "scrubbing" the plane back and forth across the sandpaper. To avoid sanding too much (and opening up the throat too wide), it's a good idea to check your progress frequently.

CHECK THE OPENING. The idea is to make the opening in the sole just large enough so shavings don't clog up the plane. To check this, install the blade so the cutting edge is flush with the sole (detail 'b', above). What you're looking for here is no more than a 1/16" gap between the tip of the front block and the blade as shown in detail 'a,' above. If the gap isn't wide enough, remove the blade and continue sanding.

SQUARE OPENING. Once the opening is established, there's just one more thing to check. That's to see if the front edge of the opening is square to the sides (Figure 2). If it's not square, remove the blade and carefully take a few light passes with a file (Figure 3).

How-To: PREPARE THE PLANE FOR USE

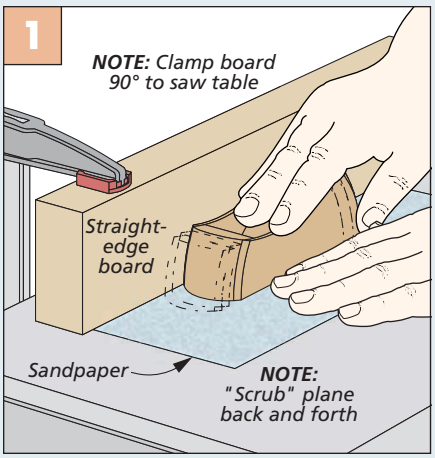

Flatten Sole. Using a straightedge board clamped to the saw table as a guide, sand the bottom of the plane.

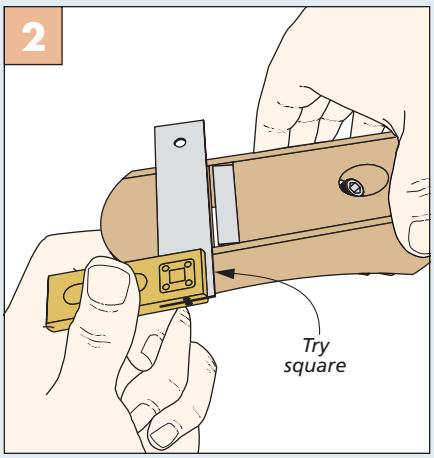

Check for Square. Next, use a small square to check that the throat is still square to the sides of the plane body.

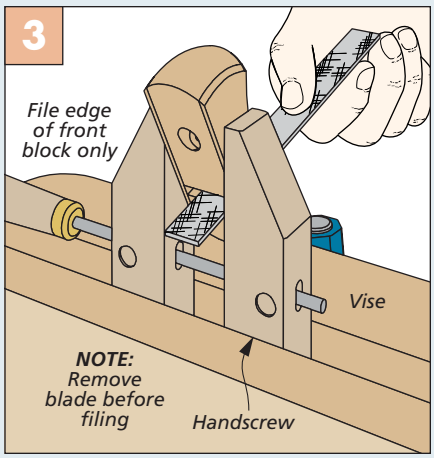

Make Adjustment. If needed, use a file to gently remove material from the front block, returning the throat to square.

FINISH. Finally, to complete the plane and protect the surface from getting dirty, I applied a couple coats of an oil finish. I used tung oil, but other oil finishes will work, as well.

ADJUSTING THE BLADE

As with any hand plane, the secret to getting paper-thin shavings is to use a sharp blade, and adjust it so the cutting edge is just a whisker below the sole of the plane.

I start by roughly positioning the blade, as shown in Step 1, below. To hold it in place, the cap screw is tightened with an Allen wrench so the blade is snug (photo at right).

FINE-TUNING. Before fine-tuning the blade, I make a trial cut. Depending on the thickness of the shaving, the blade can be raised (or lowered) by tapping the plane with a wood or non-marring mallet.

To make a shallower cut, tap the back end of the plane body (Step 2). Tapping the front of the plane moves the blade forward for a deeper cut.

SQUARE THE BLADE. If you need to square the blade to the plane's body, the process is slightly different. The "high" corner of the blade is dropped into the cutting position by tapping on the opposite side of the plane as you can see in Step 3. W

▲ The blade is held in place by tightening the socket head cap screw with an Allen wrench.

How-To: ADJUST BLADE FOR USE

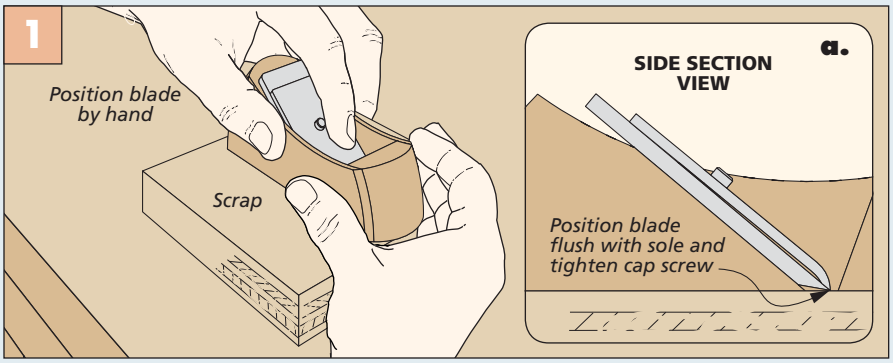

Step 1: Position the Blade. The blade is positioned so the cutting edge is flush with the sole (bottom). Then the cap screw is tightened with an Allen wrench until the blade is snug. This pulls the cutting edge down just below the sole of the plane.

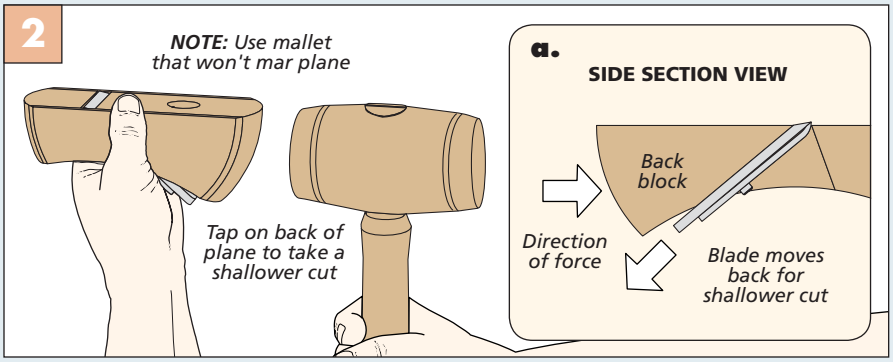

Step 2: Adjust Depth of Cut. After making a trial cut, you may need to adjust the depth of cut. To make a shallower cut, tap on the back of the plane with a mallet. To make a deeper cut, tap the front of the plane.

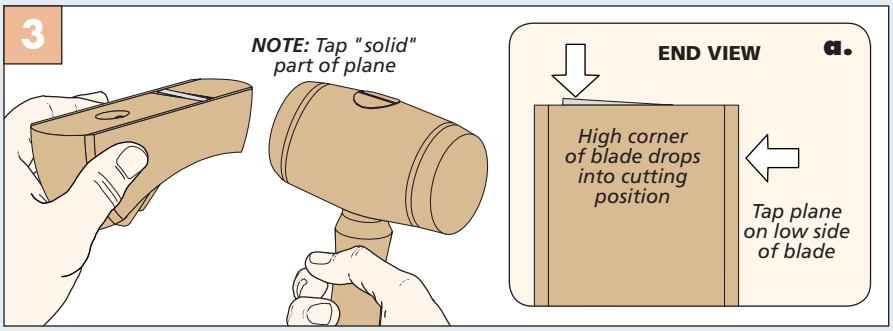

Step 3: Square the Blade. To maintain a consistent depth of cut across the width of the blade, the cutting edge should be parallel with the sole. Striking the plane's body on the opposite side of the "high" corner drops the blade into the proper cutting position.

Woven-seat Tall Stool

Strong, straightforward construction, along with dynamic chamfers, make this stool something to see. The Danish cord weave of the seat adds comfort as well.

There are times when it's fun to shake things up. You know, go out on a limb and see what a new view looks like. Now and again, I get the itch to color outside the lines a little bit and see what happens. I acted on some of those urges on this project and it worked out fine.

Okay, I admit, at first glance the stool you see above doesn't seem too wild, but I did try a couple of new things. Starting at the top, the material I used for the seat isn't wood. And the way I tapered the legs adds a flair that you might want to try as well.

GOOD BONES. The height of the stool is perfect for use at a kitchen island, a raised bar in a family room, or multiple other settings that require a quick and comfortable place to sit. As you can see here, the stool is topped off with an attractive, soft, and comfortable woven seat. This adds a handmade touch to the project. This style of weaving is known as a "Danish cord" weave.

Instead of using traditional paper stranded cord (known as "Danish cord") to weave the seat, I chose paracord. It's a strong cord that's designed to be used with parachutes. It comes in a wide variety of colors to choose from also.

Start with the **LEGS**

I started the project by focusing on the legs. As you can see in the main drawing, the blanks for the legs are glued up from 1"-thick stock. The grain doesn't have to match perfectly, but avoid the unwanted contrast of mating sapwood to heartwood when pairing up the lumber. Detail 'b' shows the size you need to trim the legs to before moving on to making the mortises.

MORTISE DETAILS. Each leg has four mortises — two at the top for the aprons and two closer to the center of the legs for the stretchers. Detail 'a' shows the locations of all the mortises. First, I want to focus on the mortises for the aprons.

To create a strong bond between the legs and aprons, I wanted the mortises as deep as possible. As you can see in detail 'b', these mortises will intersect at the bottom. The way you cut the apron tenons will take this into account.

Figure 1 below shows how I tackled each mortise on all the legs one at a time. A stop block helps to keep the mortises perfectly aligned to each other on all the legs. Use a chisel to clean up the walls and corners of the mortises.

TAPERED CHAMFERS. When it came to dressing the edges of the legs, I decided to create gradual tapers. I ran the tapers in opposing directions. The jig for making these tapers is shown in Figure 2b below. It's like most taper jigs with one exception — it's used with the blade tilted 45°. Doing this lets me make a taper that expands in width as it progresses. It's easy to alternate the taper. After each pass, turn the leg to the next edge, and flip it end for end. Detail 'b' above shows how I oriented the legs.

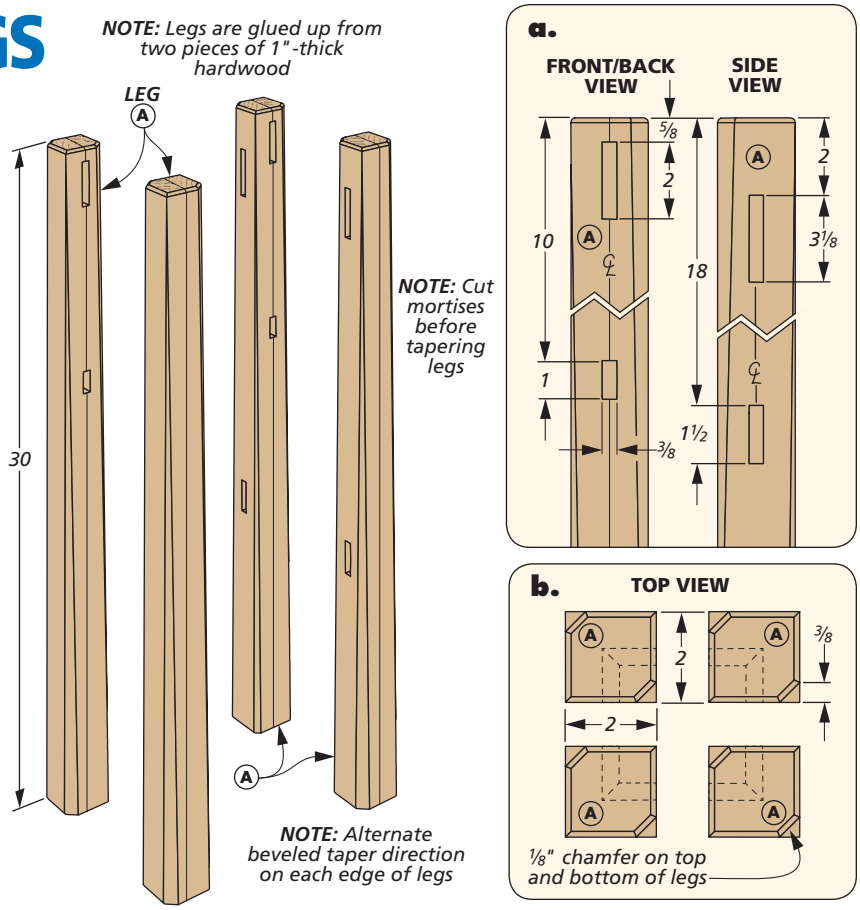

How-To: MAKE THE MORTISES & TAPERS

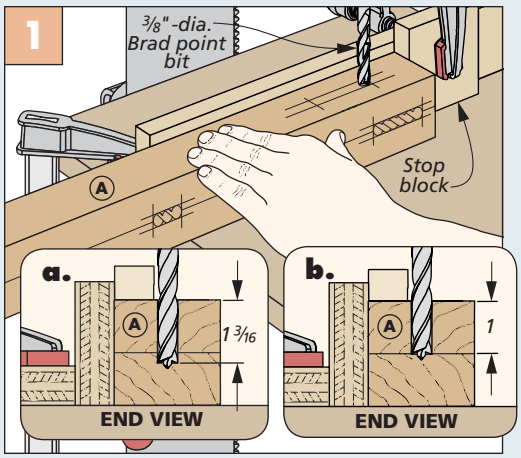

One Mortise at a Time. With a stop block in place, drill the mortise on each leg. Then move the stop block for the next mortise.

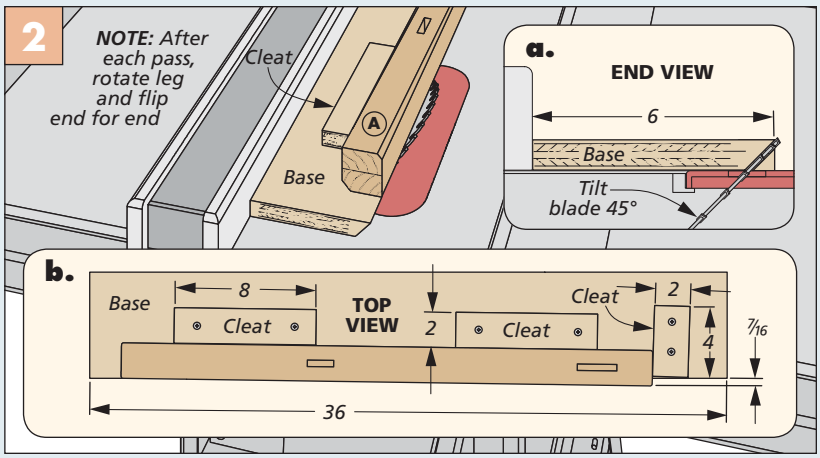

Beveled Tapers. First, tilt the table saw blade and make a rip cut on the sled base. Then position the leg on the sled as shown in detail 'b' above. After fastening the cleats, cut each taper by turning the leg, and flipping end for end.

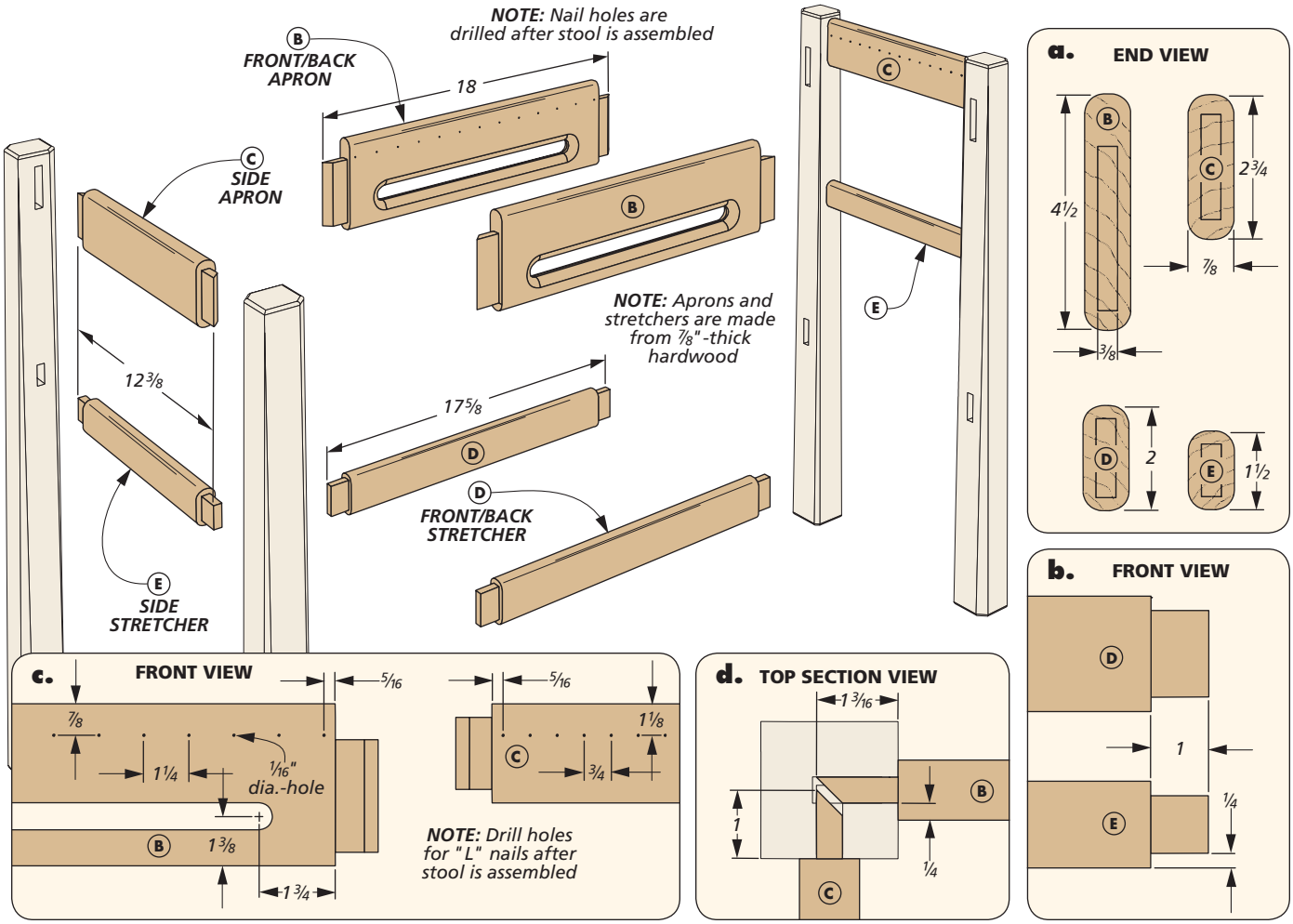

Adding the APRONS & STRETCHERS

Setting the completed legs aside, you can turn your attention to the aprons and stretchers. I tackled making these remaining parts of the stool from the top down. This means starting with the aprons, then working on the stretchers.

DESIGN DETAILS. The drawing above shows that the front and back aprons are wider than the side aprons. Adding that feature into the stool gives a lot of stability at the top end of the chair. The other duty of the aprons is to act as the frame for the weave of the chair seat. One more detail to mention, the front and back aprons have a long slot in them that makes for a convenient place to pick up the stool for moving.

TENONS. The size of the tenons on the aprons are going to give you a lot of glue surface, making the stool very strong. Detail 'a' shows the offset location of the tenon on the front and back aprons (the tenon locations on the side aprons and stretchers are shown here as well). Figure 1 on the next page shows you how to make the tenons on the front and back aprons.

Figure 2 shows you how to cut the tenons on the side aprons. Since these are centered, you only have two blade height adjustments to make. When it comes to the stretcher tenons, although different widths, you need only one setup to cut all of the tenons.

One more detail needs to be addressed on the tenons. As Figure 4 shows, you need to cut a 45° bevel on the ends of the apron tenons so they don't run into each other in the mortise. With that out of the way, you can move over to the drill press and router table to focus on making the slot in the apron pieces.

SLOT INFO. It's a simple thing to make the slot in the apron. It starts at the bench laying out the endpoints, then drilling them at the drill press with a Forstner bit (Figure 5).

A SMOOTH SLOT. The next order of business is to set the fence of the router table the distance needed to make the lower edge of the slot. Detail 'a' in Figure 6 shows how to set that up. For the sake of safety, I made the cut in multiple passes, raising the router bit between passes. To finish the slot, I adjusted the fence (detail 'b') and repeated the process on the other edge of the slot.

ROUNDOVERS. After switching over to a roundover bit, I eased the edges on the aprons and stretchers (Figure 7). All that's left to do is round over the edge of the slot. Take your time doing this to avoid chipout (Figure 8).

After gluing up, staining, and finishing the stool, the woodworking part of the project is complete. For a change of pace, it's time to weave a seat.

How-To: MACHINE THE APRONS & STRETCHERS

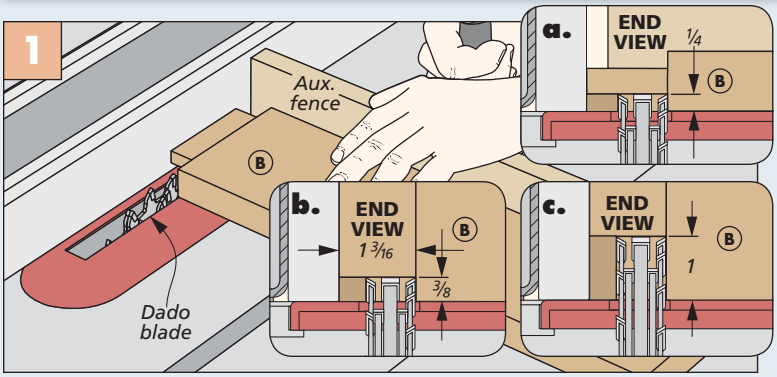

Front & Back Aprons. The front and back aprons have a large tenon that is offset on the workpiece. First cut the cheeks, then finish the shoulders. Reset the blade to cut the shoulders of the tenons.

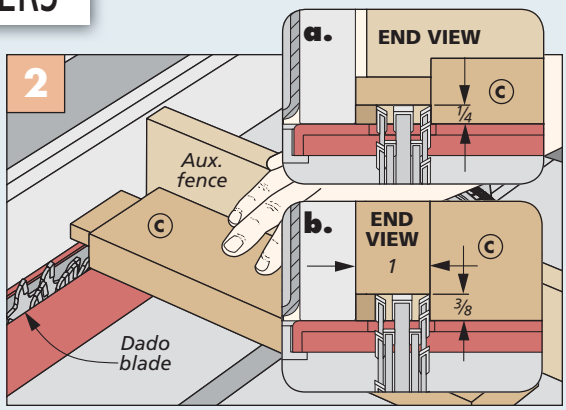

Side Aprons. The tenons on the side aprons are centered on the workpiece. All it takes is setting the blade height to make the complete tenon.

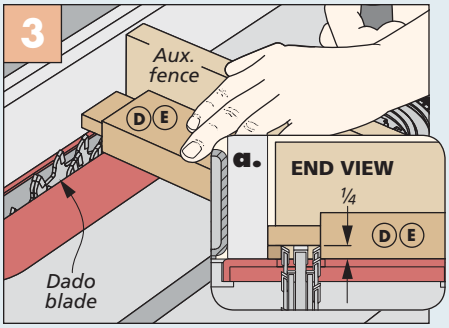

Stretchers. The smaller tenons on the stretchers are centered like the tenons on the side aprons.

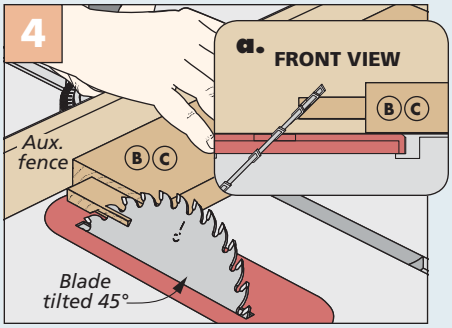

Bevel the Tenons. The four apron pieces have the ends of the tenons beveled to make room for each other.

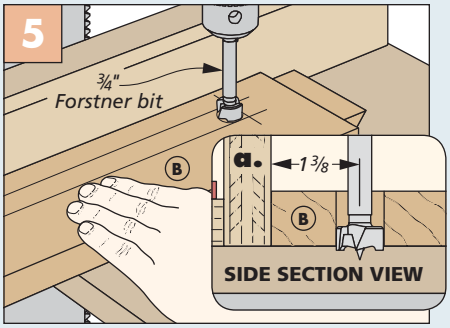

Endpoints of the Slot. A Forstner bit establishes the endpoints of the slot in the front and back aprons.

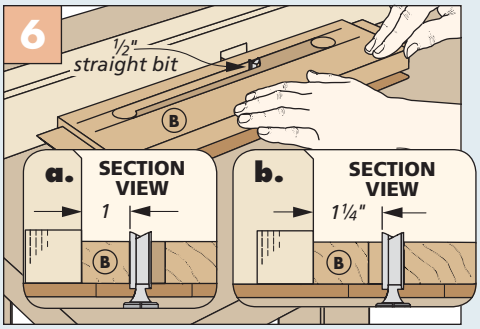

Routing the Slot. The slots in the aprons are made with a straight bit at the router table. Do this in multiple passes.

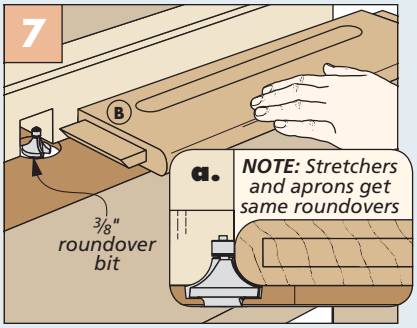

Roundovers. A roundover bit in the router table makes short work of edging the aprons and stretchers.

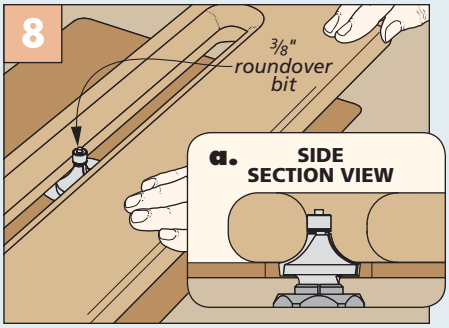

Round Over the Slot. To avoid any chipout, take your time easing the edge of the slot in the front and back aprons.

Materials, Supplies & Cutting Diagram (for one stool)

A	Legs (4)	2 x 2 - 30
B	Front/Back Aprons (2)	7/8 x 4 1/2 - 18
C	Side Aprons (2)	7/8 x 2 3/4 - 12 3/8
D	Front/Back Stretchers (2)	7/8 x 2 - 17 5/8
E	Side Stretchers (2)	7/8 x 1 1/2 - 12 3/8
•	(54) Danish cord nails	
•	350' 550 Paracord	

1" x 5" - 84" Cherry (Two boards @ 3.6 Bd. Ft. each)

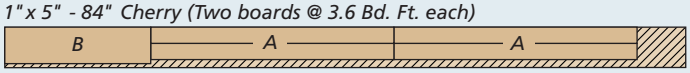

1" x 3" - 96" Cherry (2.5 Bd. Ft.)

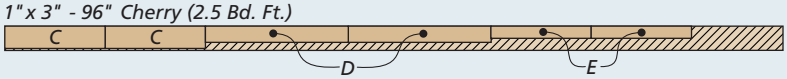

Completing the **STOOL**

Now that the tools are put away, the shop's cleaned up, and the stain and finish are dry on the stool, it's time to weave the seat. This might seem intimidating at first, but if you follow the steps outlined here, you'll have success in the end. But before the cord starts flying, I want to shed a little light on the particulars of what I'm doing here.

THE PATTERN. The type of weave you're looking at in the photo at right is known as a "*Danish cord*" weave. It's closely associated with a cord that's made up of three wound strands of paper cord. The cord, and this weaving technique, normally go hand in hand. But for this project, I wanted to go with a non-traditional look, so I chose paracord.

PARACORD DETAILS. Paracord was originally designed to be used as suspension lines for parachutes. It's a strong, lightweight cord that's available in multiple colors. In Sources on page 67, you'll find details on this product.

NAILS FIRST. There's an "L"- shaped nail that's used on the inside of the stool to secure the cord to the stool and turn its direction back and forth across the stool. Installing these nails is where I started (Steps 1 through 3 below).

How-To: START THE SEAT WEAVE

1

Nail Locations. I laid out the nail locations on paper, then used an awl to mark a starter hole for drilling.

2

Drill Holes. After removing the paper, I used a bit slightly smaller than the nail size to drill shallow starter holes.

3

Set the Nails. Start by tapping the nails in place. Then use a piece of ¼" material to set the nails to a uniform depth.

4

Starting the Warp Row. Tie a knot in the end of the cord and hook it over the first nail at the back of the stool.

5

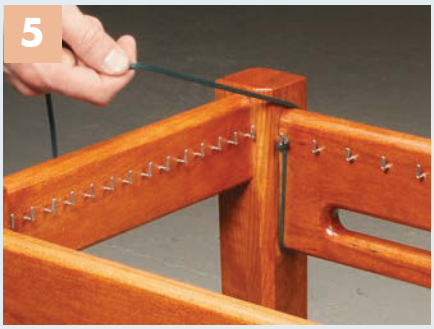

Under and Over. Loop the cord under the apron and over the top to the front. Keep the cord snug against the leg.

6

Over the Top. Loop the front apron and hook the cord on the first nail and return under the apron to the top side.

THE GEOGRAPHY OF WEAVING

I'm going to take a moment to describe the lay of the land when it comes to weaving. This will help you navigate the steps you see on both pages. To start, the term *row* means a group of paracord strands that vary in quantity to fit the stool properly.

WARP ROWS. The rows of cord that travel from front to back across the big aprons and through the slots are the warp rows (there are five strands of cord in each of these rows). There's a spacer row of turned cords (four strands of cord) that separate each of these rows creating openings for the cord that will be woven across.

WEFT ROWS. The side to side rows are the weft rows (three strands of cord). They weave in and out of the warp rows and have spacer rows (two strands of cord) of their own. Both rows start at one end of the stool, turn back and forth on the nails, and finish at the other end. On occasion, you'll need to splice cord together to continue the weave.

SPLICING. Each stool takes about 350' of cord to weave. I found it's best to work with about 100' at a time (it's easier to feed around the spacer rows). Step 10 shows you that the best way to make a splice is to clamp off the cord and position the splice loop behind the apron out of sight. Shop Notes on page 65 shows the knot to use on the splice you see in Step 11. When all the weaving is done, Step 15 shows you how to lock the weave in place. W

How-To: FINISH THE WEAVE

Repeat. Pull the cord tight against the first cord and repeat this process until the warp row (five strands) is complete.

Warp Spacer. Establish the space between the warp rows by winding four strands of cord around the apron.

Opposite Spacer. Return to the other side of the stool and fill in the warp spacer (four strands). Repeat the process.

Splice. To create a splice, make a loop at the desired endpoint of the cord. Use a spring clamp to hold the cord taut.

Tie the Knot. Feed the new length of cord into place and draw it tight. Finish the warp rows and spacers.

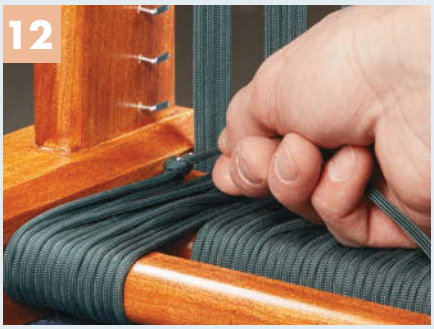

Tie Off the Warp Rows. To finish the row, tie the end of the cord to the last nail while keeping the cord taut.

Weave the Weft. Alternate the weft rows (three strands) over and under the warp rows, with spacer rows in between.

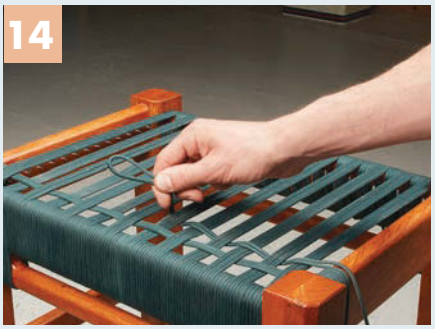

Return. Complete the weft spacer row (two strands). For ease of weaving, fold the cord and feed it to the other side.

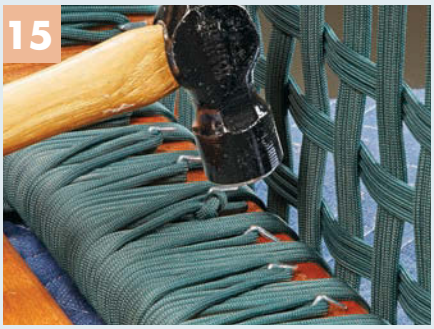

Lock in Place. When the weaving is finished, tap the nails over the cords to lock the weave in place.

Shop Project

Router table Storage Cabinet

Fill the unused space under your commercial router table with a storage cabinet that'll hold all of your router bits and accessories.

▲ The rear of the router table storage cabinet is equipped with a duct to attach to a dust collection system.

I'm a big fan of my *Kreg Precision Router Table*. It has a spacious top for supporting large workpieces, and the adjustable legs mean that I can customize the table to comfortably fit my height. But the open space under the top always bothered me. In my small shop, wasting any space just isn't an option.

My solution was to build this storage cabinet you see above. It neatly slips into the opening between the router stand's legs and rests on the cross rails. And since the router table top overhangs in the rear, I let my cabinet run a little deep to take maximum advantage of this "dead" space.

MULTIPLE BENEFITS. This all-plywood storage cabinet yielded enough room for a spacious drawer down below. It easily holds all of my router accessories, like wrenches and insert rings. The two slide-out storage units along the sides have a series of "shelves" for holding router bits. All three are on full-extension drawer slides for smooth and trouble-free operation.

BONUS DUST COLLECTION FEATURE. As if all that storage weren't enough, I even enclosed the area around the router so I could link it to my shop's dust collection system. In the rear, a standard HVAC duct is used as the out-flow dust port (inset photo).

A door in the front with a magnetic latch allows for access to the router. Plus, a trio of fully functioning air-flow vents

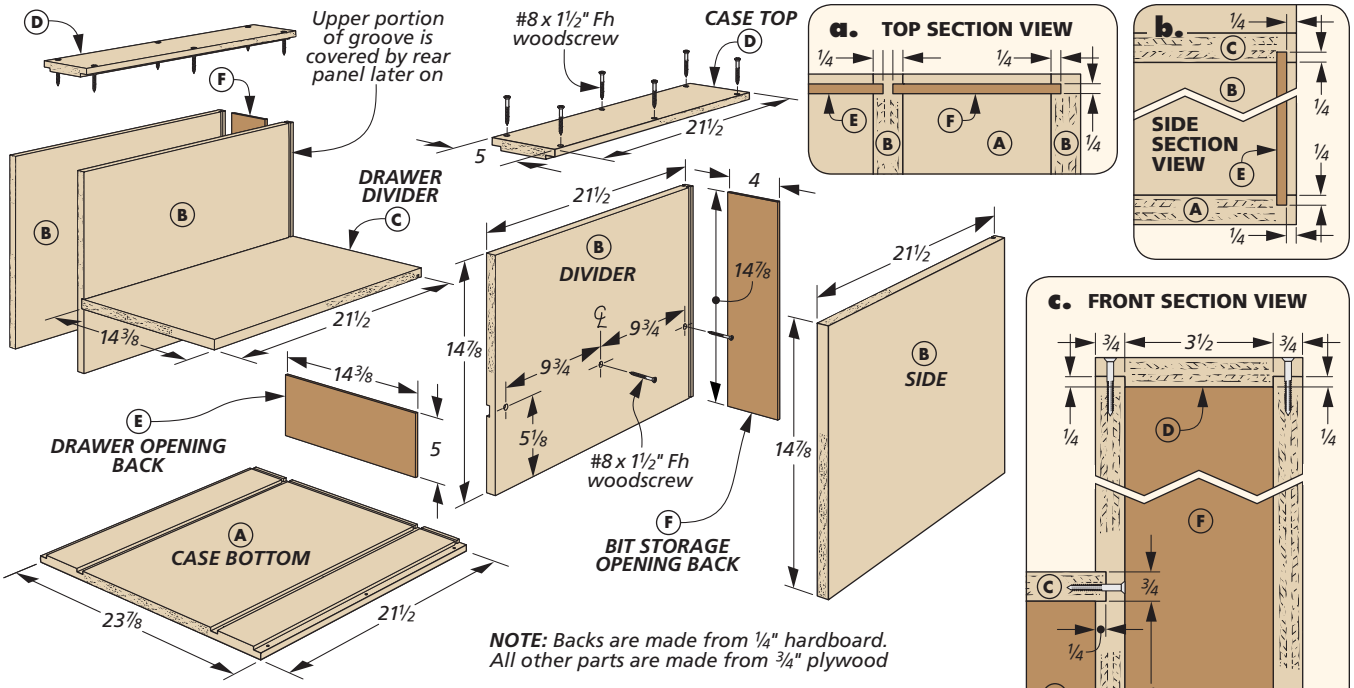

aids the dust collection system in pulling the dust out the back of the unit. While I designed my storage cabinet around a *Kreg* router table, the plan could easily be modified to fit any open-base table.

CASE FIRST

The logical starting point for this project is with the interior "carcase" of the case. All of these parts fit together with a series of dadoes, rabbets, and grooves. A little glue and some screws provide the mechanical holding power. The drawings above provide all the information you'll need for cutting these parts to size. And the How-To box below shows the joinery details. But let me point out a couple of things.

MATERIAL CHOICE. With the exception of the three ¼" hardboard panels in the back, all of the parts are made from plywood. And since I didn't want to cover the plywood edges (this is a shop project, after all), I used Baltic birch to avoid unsightly voids in the plys.

You'll also notice that the back panels fit into grooves cut in the surrounding plywood parts. However, the grooves cut in the interior of the dividers run from the top of the workpiece to the bottom. But don't worry about the exposed groove up top. It'll be covered by the rear dust panel later on. After cutting the parts to size, you can assemble them. I left the sides off for now to make installing the slides easier later on.

How-To: CUT THE JOINERY IN THE CABINET PARTS

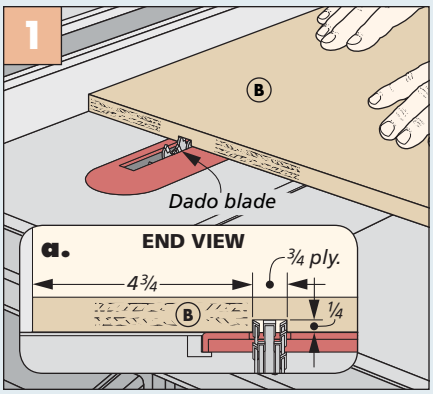

Dadoes in Dividers & Bottom. Load a dado blade in the table saw to cut the dadoes in the bottom and dividers.

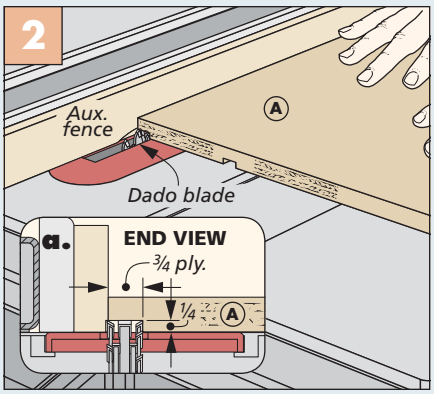

Rabbets in Bottom & Tops. Stick with a dado blade for creating the rabbets. An auxiliary rip fence is needed here.

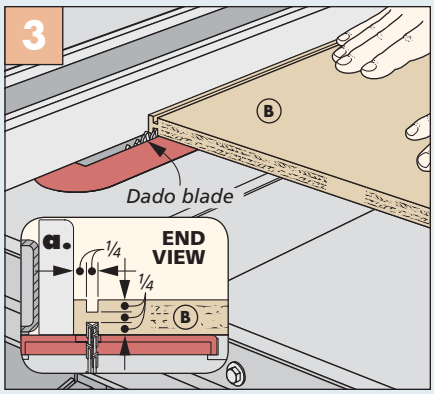

Grooves for Back Panels. Switch to a narrower dado blade for cutting the grooves that house the back panels.

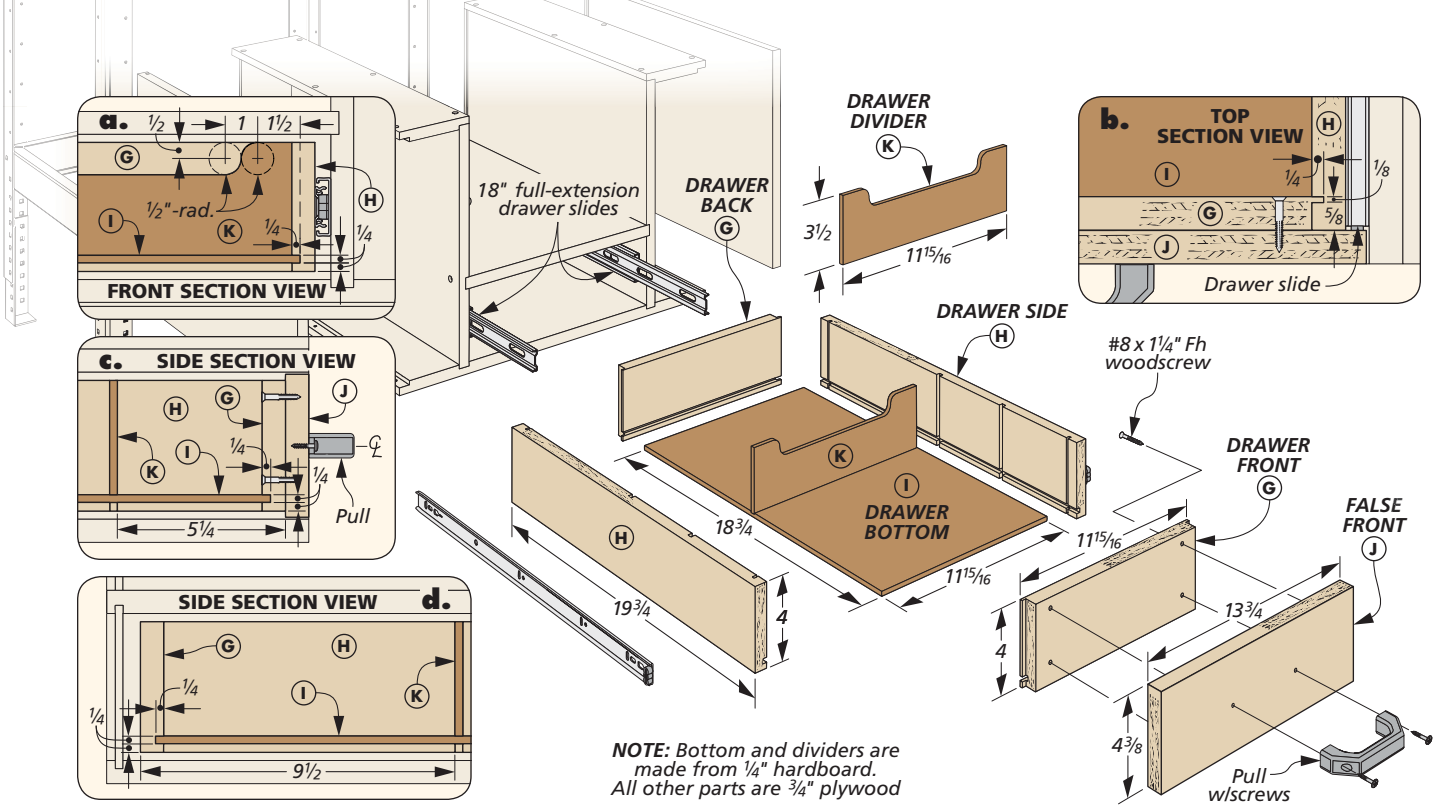

Add the DRAWER & BIT STORAGE

Once the case of the storage cabinet is completed (less the two sides), you can now move on to making the drawer and the two router bit storage slide-outs. All three of these units utilize similar construction methods, including the use of false fronts.

HEAVY-DUTY DRAWER. The drawer is held together with tongue and dado joinery on the front, back, and sides. I started by cutting the rabbets on the ends of the front and back to form the tongues (Figure 1, below). Drilling the countersunk holes in the inside face of the front for mounting the false front would be tricky after assembly. So I stopped over at the drill press to take care of them at this point, as shown in Figure 2.

DADOES & GROOVES. The drawer bottom is made from ¼" hardboard. It's housed in a groove that runs around the interior of the drawer parts. I made this groove at the table saw with a narrow dado blade (Figure 3). Using the same blade setup, I cut the dadoes in the sides to hold the front and back pieces.

I also cut evenly-spaced dadoes in the sides to hold a hardboard divider or two. You can divide the drawer up in whatever fashion suits your needs.

How-To: MAKE THE DRAWER PARTS

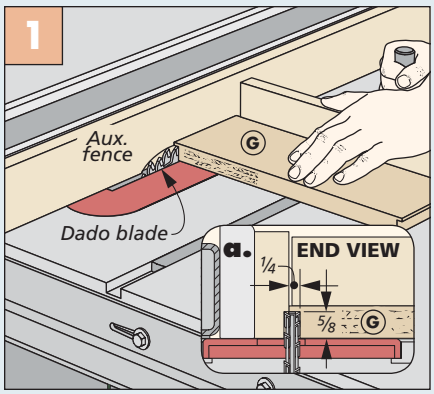

Rabbet Fronts & Backs. Use a dado blade buried in an auxiliary fence to cut the rabbets on the fronts and backs.

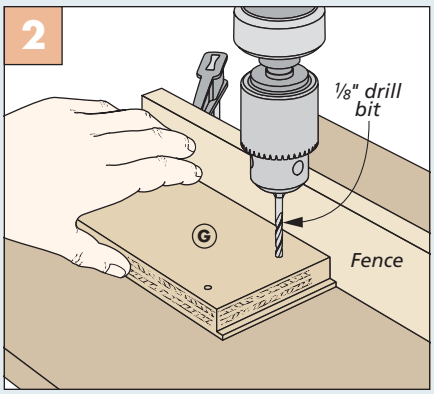

Mounting Holes. Before moving on, drill the mounting holes for attaching the false front to the drawer front.

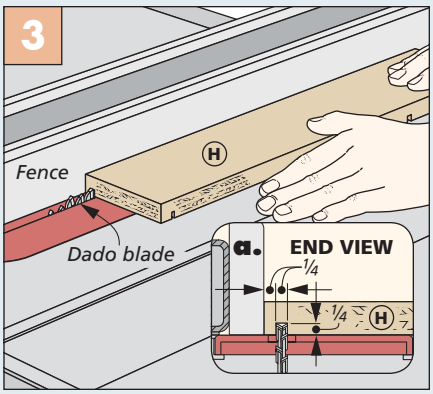

Grooves for Bottom. Cut a groove in the drawer front, back, and sides to hold the hardboard bottom.

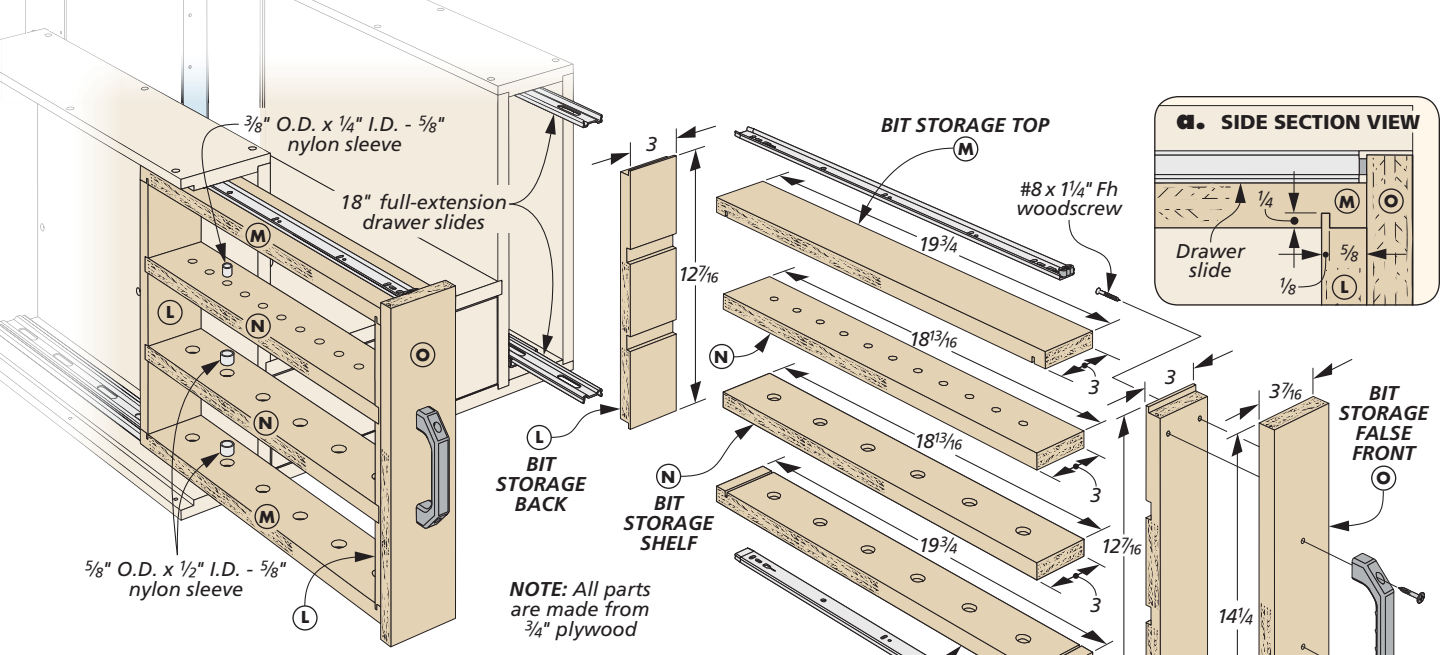

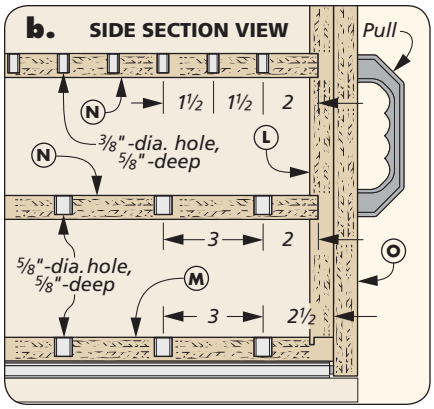

Now, assemble the drawer and make your dividers (detail 'a', previous page). A pair of full-extension drawer slides, the false front, and handle complete the drawer construction.

BIT SLIDE-OUTS

The two router bit storage slide-outs follow a similar tack as the drawer. And that starts by cutting the rabbets in the front and back to form the tongues on the ends, as well as drilling the mounting holes for the false fronts. I also took the time to cut the dadoes in these two workpieces to hold the pair of bit shelves (Figure 1). Finish up the joinery on the slide-outs by cutting the narrow kerfs in the top and bottom to capture the front and back.

BIT STORAGE HOLES. Before moving on to assembly, you'll need to drill the stopped holes in the two shelves (and the bottom) for holding router bits, as shown in Figure 2. Here again, you can customize the size and placement of the holes to accommodate your bits.

I opted to put all of my ½"-dia. shank bits in the bottom and lower shelf. The top shelf holds ¼"-dia. shank bits. And to make sliding the bits in and out of the holes easier, I slipped a nylon sleeve in each hole (main drawing & detail 'b'). This means I drilled my holes oversized to accept the sleeves. The sleeves were simply cut to size from a couple of long pieces of nylon tubing.

ASSEMBLE AND INSTALL. You can assemble the slide-outs with glue and clamps. After the glue cures, you'll add the full-extension slides. This task is made much easier since the sides have yet to be attached to the case.

When you're satisfied with the function of the slides, go ahead and attach the sides to the case with glue and screws. After that, it's just a matter of securing the false fronts with screws and adding the handles.

You could stop here and have a fully-functioning storage cabinet. But if you're interested in adding the dust collection parts, turn the page to get started.

How-To: MAKE THE BIT STORAGE SLIDE-OUTS

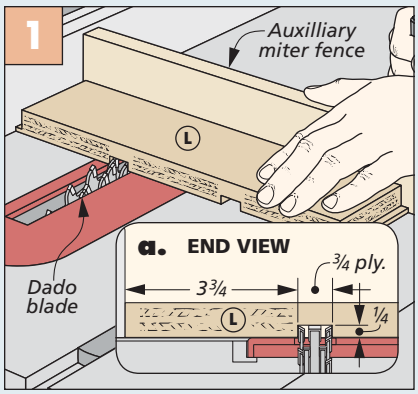

Dadoes for Shelves. Cut the dadoes in the front and back at the table saw. These support the shelves.

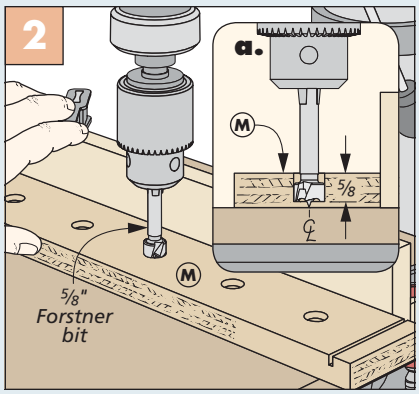

Stopped Holes for Bits. Set the stop on the drill press for drilling the holes in the shelves that hold the bits.

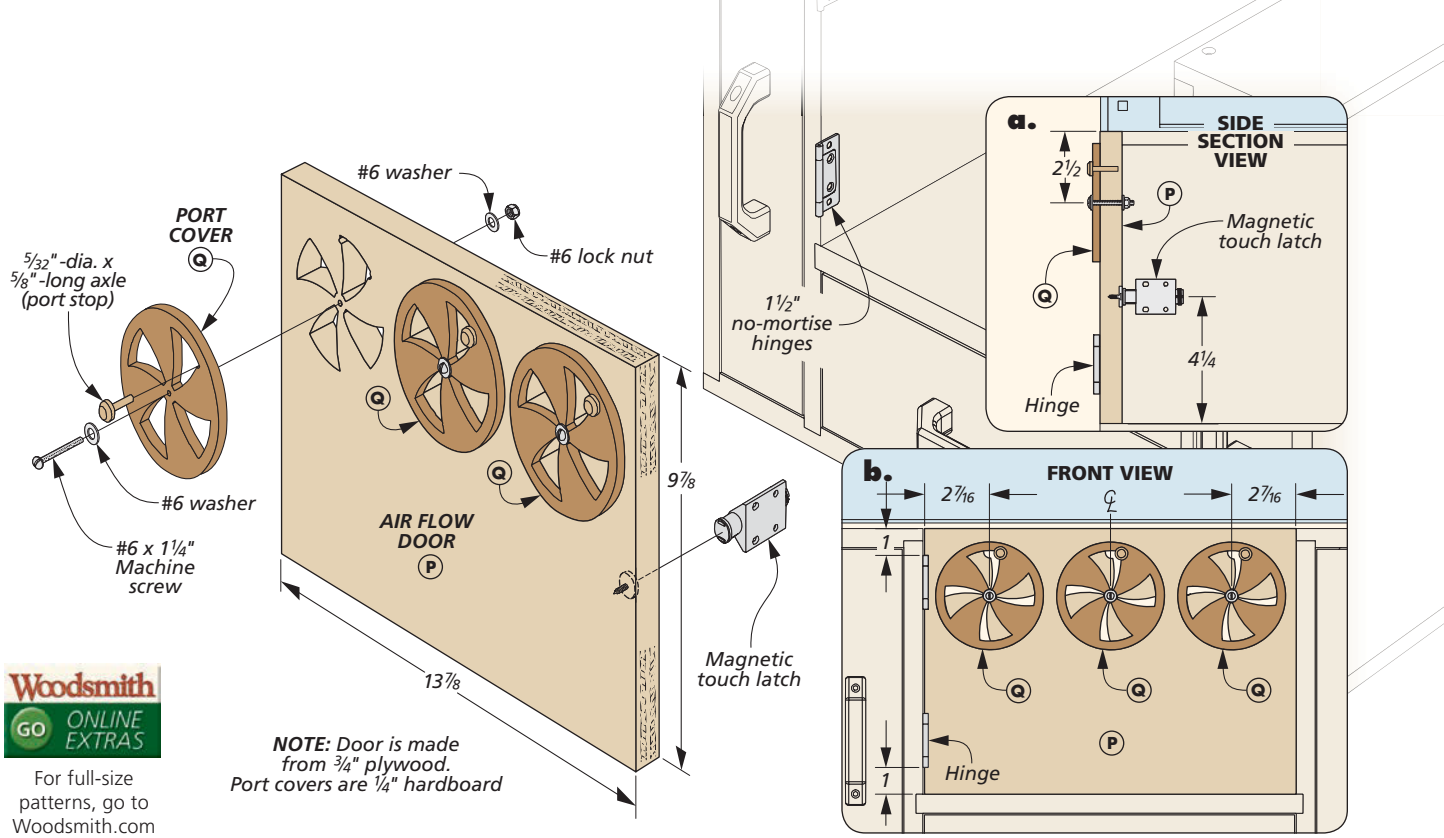

Woodsmith GO ONLINE EXTRAS

For full-size patterns, go to Woodsmith.com

Making the AIR FLOW DOOR & DUST PORTS

By the very nature of a router, it's difficult to catch all of the dust and debris created at a router table. But adding the panels shown on these two pages goes a long way to contain a great deal of that mess. And another benefit of enclosing the router with these panels is the reduced noise you'll experience from an ear-splitting router motor.

IN THE FRONT. The key to the effectiveness of this dust collection system is the addition of the three air flow ports on the door. These rotating air vents can be opened to draw air into the system when dust collection is in use, or you can contain the mess when dust collection is turned off by closing the port covers.

CUT OUT OPENINGS. The unique openings in the door and the three port covers can be cut out using a jig saw (Figure 1). The openings in the port covers are slightly smaller than the openings in the door. This allows the port covers to completely block the openings in the door in the closed position. Scaled patterns for both sizes are provided in

How-To: CUT OUT THE DUST COLLECTION PARTS

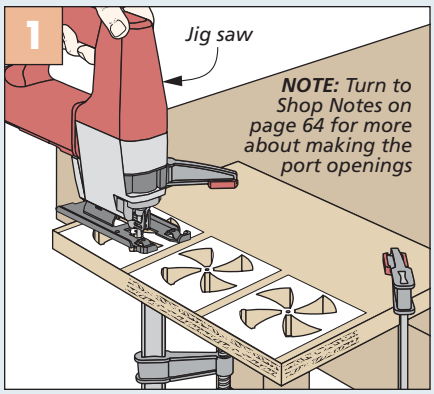

Port Openings. A jig saw and a little patience is all it takes to create the dust port openings in the door.

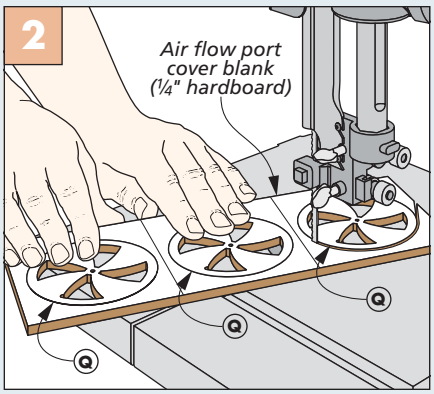

Covers. Shop Notes on page 64 provides the pattern for the port covers, as well as how to cut them out.

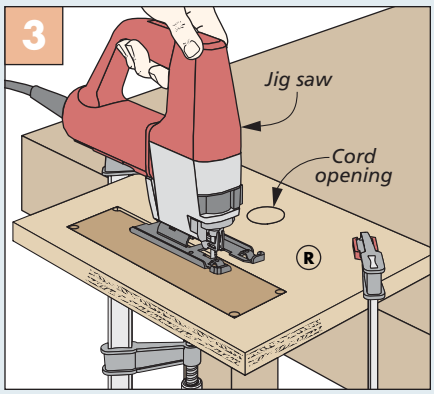

Rear Port Opening. After drilling holes, use a jig saw to cut the opening in the rear panel for the dust port.

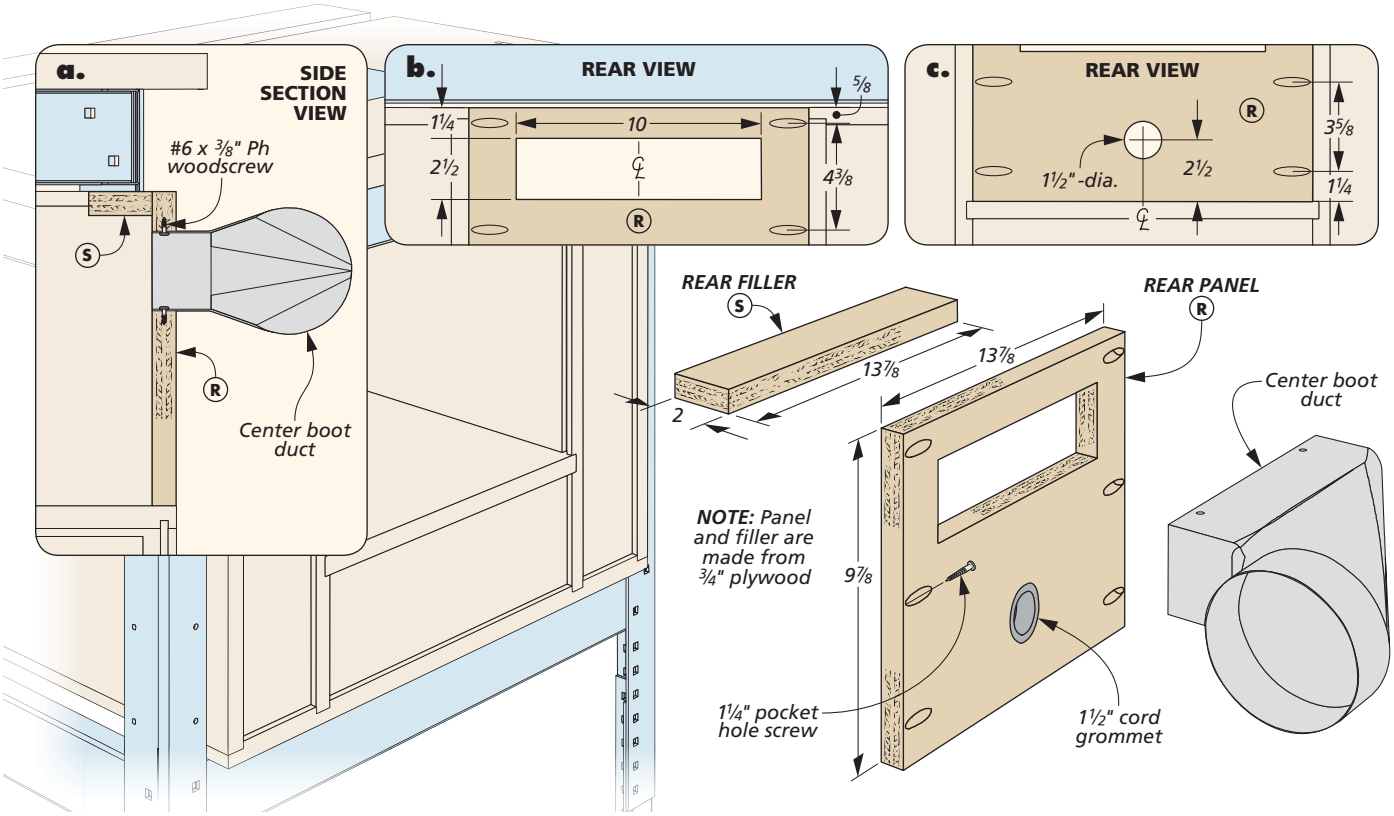

Shop Notes on page 64. After the internal openings are cut out, I simply cut out the port covers at the band saw (Figure 2 on the previous page) and sanded them smooth.

Finally, you can secure the covers to the door with machine screws and lock nuts. You want them snug, but still be able to turn them open and closed. I also glued toy axles into the half-holes you drilled earlier to act as positive stops for the ports (detail 'a' previous page).

The door itself is held to the case with no-mortise hinges. A magnetic touch latch keeps the door securely closed.

OUT THE BACK. The rear panel acts as a mounting surface for the center boot duct. This duct has a 4"-dia. opening that allows it to be hooked up to a dust collection hose. These ducts are generally readily available at most hardware stores and home centers.

A jig saw makes quick work of cutting the opening in the panel (Figure 3, previous page) and a small filler strip glued along the top edge closes off the gap. After drilling a hole for the router cord, I held the rear panel in place with pocket screws. Now with all this extra space, you can start loading it up. W

Materials & Supplies

A	Case Bottom (1)	¾ ply. - 23⅞ x 21½
B	Dividers/Sides (4)	¾ ply. - 14⅞ x 21½
C	Drawer Dividers (1)	¾ ply. - 14⅜ x 21½
D	Case Tops (2)	¾ ply. - 5 x 21½
E	Drawer Opening Back (1)	¾ ply. - 5 x 14⅜
F	Bit Storage Opening Backs (2)	¾ ply. - 4 x 14⅞
G	Drawer Fronts/Backs (2)	¾ ply. - 4 x 11 15/16
H	Drawer Sides (2)	¾ ply. - 4 x 19¾
I	Drawer Bottom (1)	¼ hdbd. - 11 15/16 x 18¾
J	Drawer False Front (1)	¾ ply. - 4⅜ x 13¾
K	Drawer Dividers (2)	¼ hdbd. - 3½ x 11 15/16
L	Bit Storage Fronts/Backs (4)	¾ ply. - 3 x 12 7/16
M	Bit Storage Tops/Bottoms (4)	¾ ply. - 3 x 19¾
N	Bit Storage Shelves (4)	¾ ply. - 3 x 18 13/16
O	Bit Storage False Fronts (2)	¾ ply. - 3 7/16 x 14¼
P	Air Flow Door (1)	¾ ply. - 9⅞ x 13 13/16
Q	Port Covers (3)	¼ hdbd. - 4 x 4
R	Rear Panel (1)	¾ ply. - 9⅞ x 13⅞
S	Rear Filler (1)	¾ ply. - 2 x 13⅞

- (1) Kreg Precision Router Table (PRS1045)
- (3) Utility Pulls
- (3 pairs) 18" Drawer Slides
- (30) #8 x 1½" Fh Woodscrews
- (12) #8 x 1¼" Fh Woodscrews
- (1 pair) 1½" No-Mortise Hinges
- (1) Magnetic Touch Latch
- (1) Center Boot Duct
- (3) #6 x 1¼" Machine Screws
- (6) #6 Washers
- (3) #6 Lock Nuts
- (6) 1¼" Pocket Hole Screws
- (4) #6 x ⅜" Ph Sheet Metal Screws
- (24) ⅝" O.D. x ½" I.D. - ⅝" Nylon Sleeves
- (22) ⅜" O.D. x ¼" I.D. - ⅝" Nylon Sleeves
- (1) 1½" Cord Grommet
- (3) 5/32"-dia. x ⅝"-long Wooden Axles

ALSO NEEDED:
Two 48"x 96" sheets of ¾" Baltic birch plywood.
One 48"x 48" sheet of ¼" hardboard

Heirloom Project

Byrdcliffe-Inspired Linen Press

With colorful carved panels and a tinted-varnish finish, this linen press is a joy to build and a beautiful addition to any room in your house.

The first thing you'll notice when you look at this project are the carved panels in the doors. While they may look complicated to create, don't fear. You don't need to be an artist or master carver to recreate the look seen here. A few simple steps and some watercolors are all that's needed to bring these panels to life. The next thing you'll notice is the green-tinted quartersawn white oak. A quick wash with a tinted-varnish will set the linen press apart from any piece of furniture you own.

INSPIRED. The inspiration for this linen press came from an original that was built in the early 1900s at the Byrdcliffe Artist's Colony. This colony was started by Ralph Whitehead, whose goal was to blend beautiful craftsmanship with an artist's touch. Much like the original in the Metropolitan Museum of Art, the linen press seen here embodies that.

CLASSIC JOINERY. The linen press is built with classic mortise and tenon joinery, but with a twist. Frame and panel sides pair with a plywood case to make construction a breeze. Some scroll saw work and innovative assembly makes the carved panels a cinch to put together. A simple paint guide is easy to follow and will leave you with great results. So grab your paint brush, dust off the scroll saw, and let's get started.

Construction Overview / OVERALL DIMENSIONS: 35¼"W x 47⅝"H x 17⅜"D

Door panels are cut on scroll saw and glued to a backer for a carved look

Hardwood molding gives the appearance of a heavy, solid-wood top

Locking rabbet joinery gives drawers a clean and classic look

Thin stiles and thick rails set the face frame apart

A plywood case makes construction simple and efficient

Frame and panel side assemblies capture a plywood case

NOTE: The article on page 52 walks you through making and painting the carved panels

NOTE: Sources for hardware can be found on page 67

◄ The carved panels set the doors apart. They may look complex, but we have a clever technique that's surprisingly simple.

The quartersawn white oak and elegant details give this linen press a classic look that is straightforward to build. ►

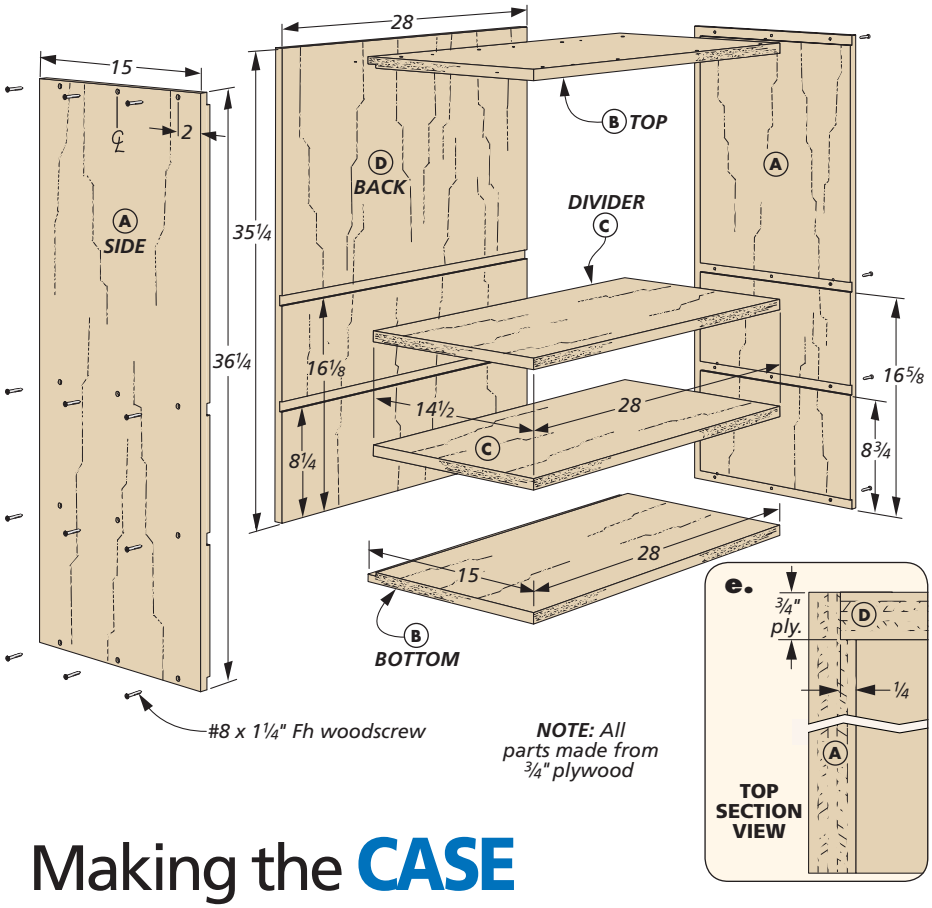

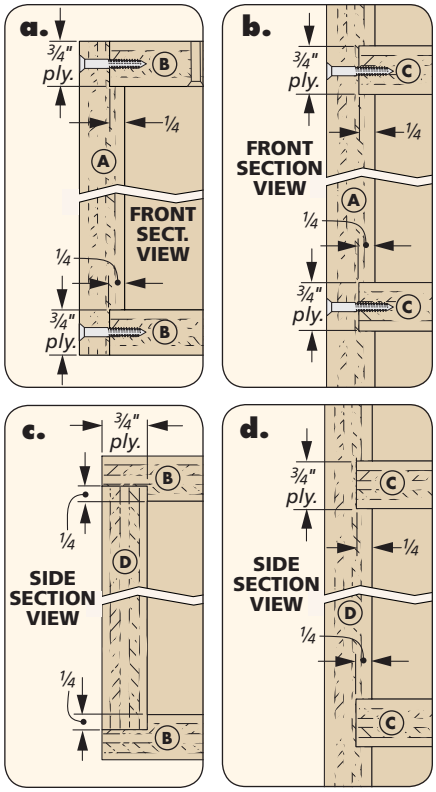

Making the CASE

I began the construction of the linen press with the case. To simplify the process, the case is built out of plywood and a face frame is added to mask the plywood edges. Later, frame and panel assemblies will get glued to the outside of the case.

To match the rest of the linen press, I chose to use quartersawn white oak plywood for the case. However, because most of the outside of the case will be covered up, you could opt to use a less expensive plywood.

A PLYWOOD CASE. The case can be broken down into a few parts that are joined together with a series of dadoes and rabbets. To start, I cut the case sides, top, and bottom to size. To attach the top, bottom, and back of the case, a few rabbets are needed in the side panels and the top and bottom. A dado blade in the table saw works well here. Figures 1 and 2 below show the details to cut these rabbets.

The dadoes in the sides are simple to cut with a router and the How-To box below provides the details for cutting them with a jig. The details on building the router jig can be found in Shop Notes on page 64. Once the side panels are complete, I cut the dividers to size.

How-To: MAKE THE CASE & FRAME

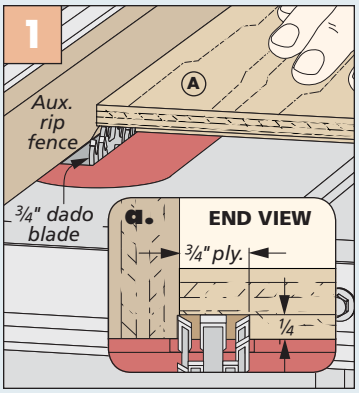

Rabbet the Sides. Use a dado blade at the table saw to cut the rabbets in the sides.

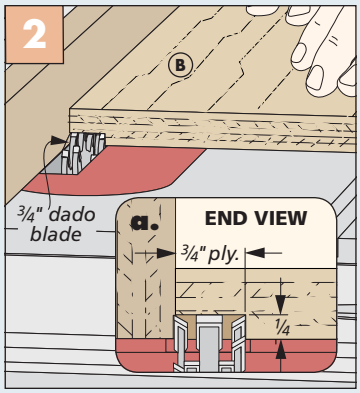

Top & Bottom. The same dado blade setup is used for the rabbet on the top and bottom.

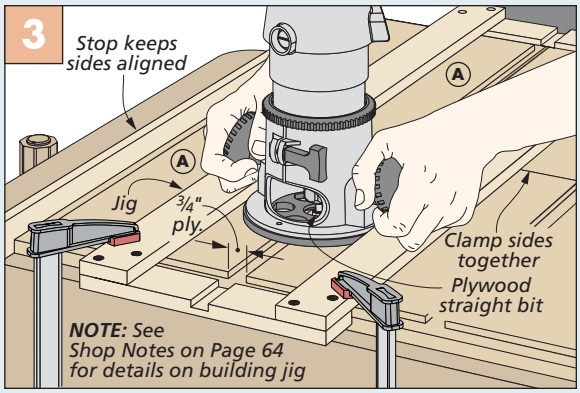

Cutting Side Dadoes. Clamp the sides together using a stop to keep everything aligned. Then clamp the jig in place to cut the dadoes in both side panels at once.

BACK PANEL. With the joinery complete, I put everything together as a dry assembly to take a measurement for the back panel. After cutting the back panel to size, rout the two dadoes for the dividers, as shown in Fig. 4.

ASSEMBLY. The next order of business is to get everything assembled. Take your time and use the back panel to ensure that everything stays square. It's important that the shelf dividers, top, and bottom are all flush with the side panels in the front. If they sit proud, the face frame won't sit well when you attach it. Screws installed through the sides will hold the case together as the glue dries.

FACE FRAME

Now that the case is assembled and dry, you can turn your attention to hiding the plywood edges on the front of the case. To accomplish this, I used a hardwood face frame. The hardwood frame is easy to install and the different thicknesses of rails and stiles adds some visual interest to the case.

RAILS. Start with the four rails that edge the case top, bottom, and dividers. Use the case as a guide when cutting the rails to length. What you're looking for is the rails to fit the width of the case exactly. Attaching them is as simple as gluing them to the plywood edges and clamping them in place.

STILES. The stiles that cover the edges of the sides are slightly different than the rails. They're narrower and not as thick as the rails. Once the glue on the rails has dried, take careful measurements to get a precise fit between the rails. Figures 5 and 6 show the details for cutting them to width and attaching them in place. Start with an oversized blank at the table saw. When gluing the stiles in place, ensure that the outside edges are flush with the sides. Using tape works well to hold all of the stiles in place while the glue dries. Finally, glue the back panel in place.

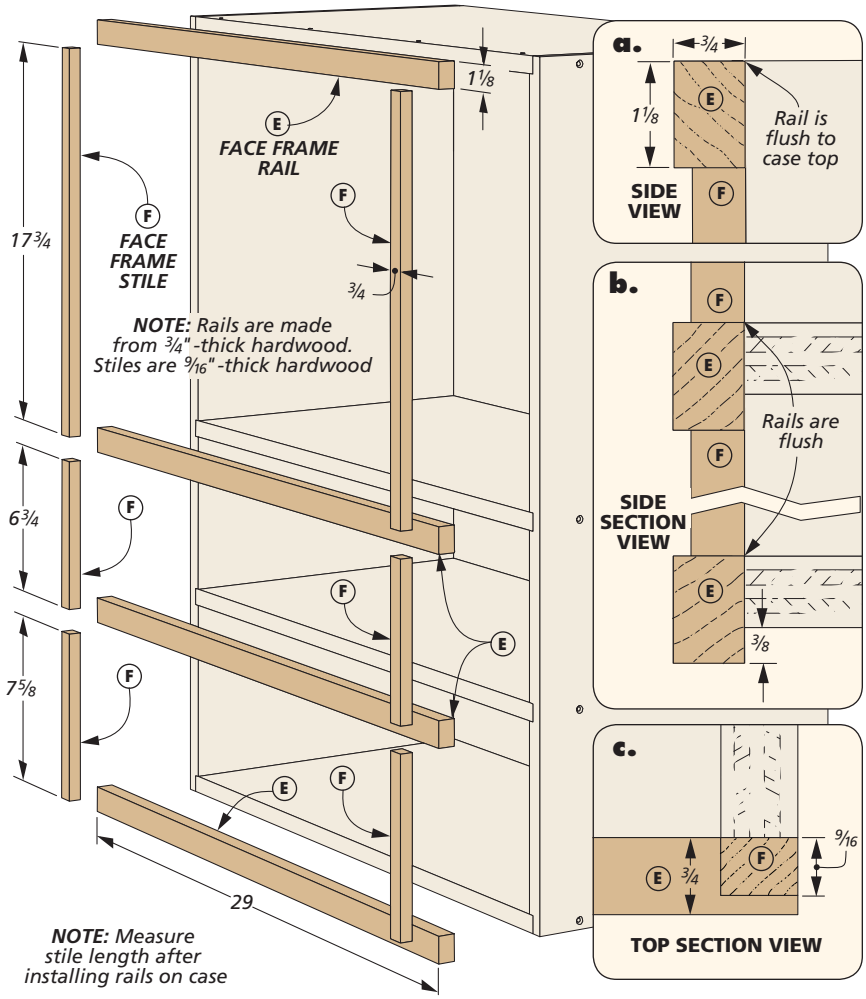

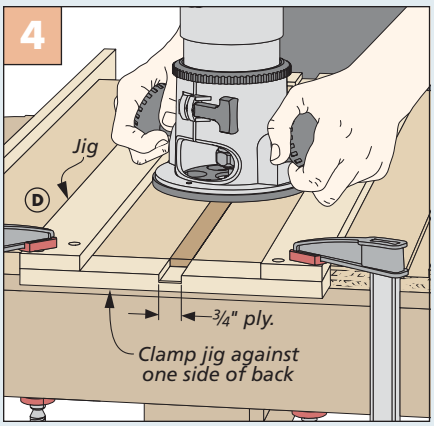

Cutting the Dadoes in the Back. Clamp the jig tightly to the back panel and rout the dadoes in two passes.

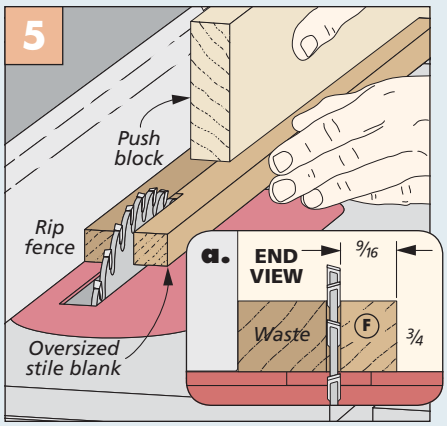

Ripping Face Frame. To safely rip the face frame pieces, use a push block and keep the waste side against the fence.

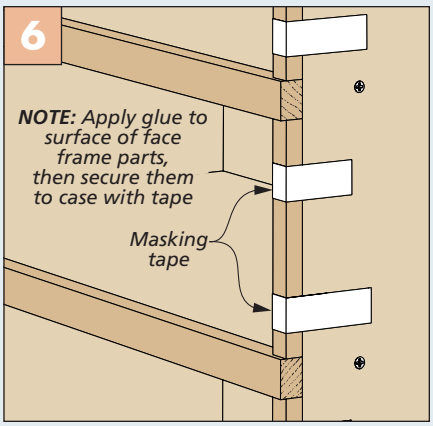

Attaching Stiles. After cutting the stiles to length, use masking tape to hold them in place while the glue dries.

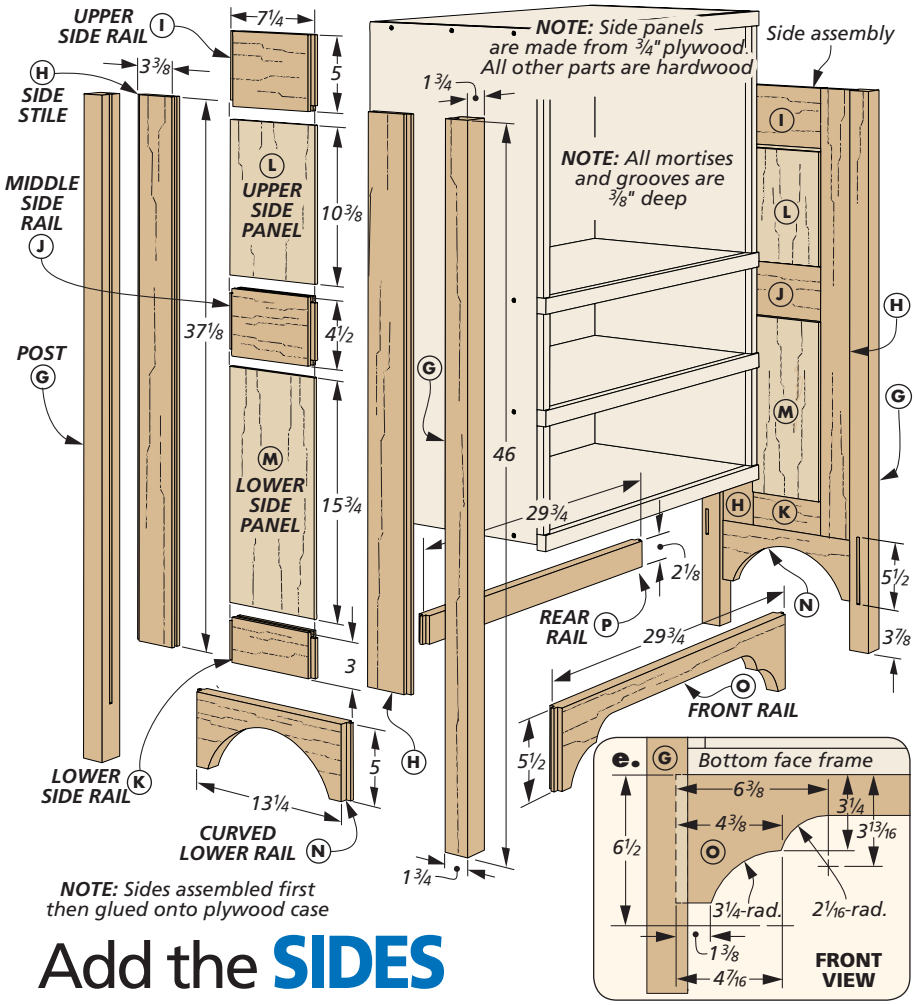

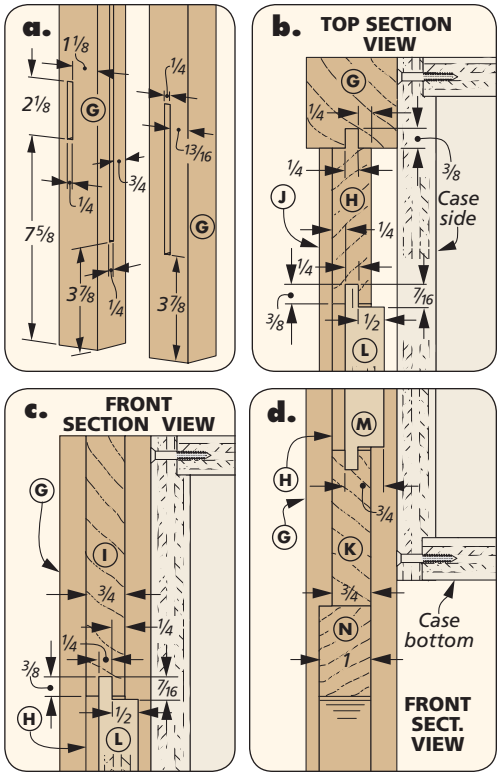

Add the SIDES

Now that the heart of the linen press is complete, you can shift your focus to the side assemblies. The sides are a frame and panel design using stub tenon and groove joinery. A pair of long posts captures the frames and a curved lower rail adds a nice decorative detail. The side assemblies are connected with a pair of rails in the front and back that support the case.

SQUARE POSTS. I started the side assemblies with the square posts that are the cornerstones of the linen press. The posts are ripped and planed to size from 8/4 stock and then cut to length. The two front posts receive a mortise for the front rail. A smaller mortise is cut into the rear posts for the rear rail. To hold the frames and lower rails, a long stopped groove is routed on the inside face of each post. The router table equipped with a straight bit makes quick work of this. The How-To box below provides the details.

How-To: CUT THE MORTISES & GROOVES IN LEGS

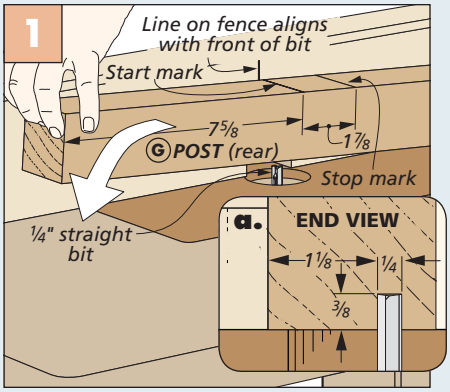

Rear Post Mortise. Cut the mortise in the rear post by lowering it onto a straight bit and stopping at the line.

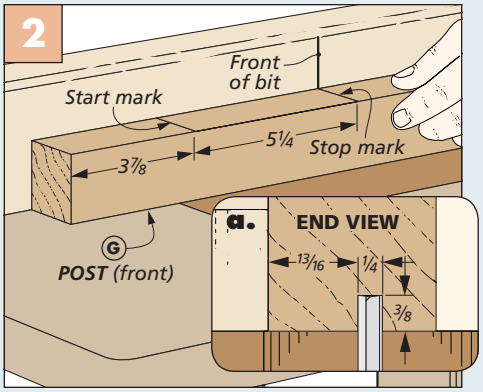

Front Post Mortise. The same process is used to cut the mortises in the front posts for the front rail.

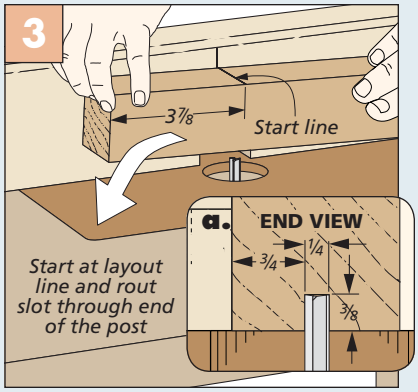

Post Grooves. Use a straight bit at the router table to create the stopped groove for the stiles.

FRAME AND PANEL

With the posts cut to size and the joinery done, you can turn your attention to the rest of the side assembly. A pair of stiles on each side holds three rails. Between the rails are two plywood panels that are rabbeted to fit into grooves in the rails and stiles. When cutting the rails to size, make sure to note that the upper, middle and lower rails are all different widths. A thicker, curved lower rail sits at the base of the frame and panel assembly.

STILES. The stiles for the side assemblies have a long tongue on one edge and a centered groove on the other. Figures 1 and 2 show the details for cutting these.

RAILS. Like I mentioned before, the three rails that make up the frame are different widths. The upper rail is the widest, followed by the middle, then the lower rail. The upper and lower rail receive centered grooves on the inside edges while the middle rail receives centered grooves on both edges. Stub tenons are cut on the ends of each rail to fit the grooves cut in the side stiles. While cutting the tenons for the rails, I cut the tenons on the front, rear and curved lower rail. Figure 3 shows how I went about cutting the tenons.

PLYWOOD PANELS. The rails and stiles capture two plywood panels that are different sizes. To fit the plywood panels into the grooves, a rabbet is cut around the outside creating a tongue (details on previous page). I cut these panels and the rabbets next.

CURVED LOWER RAIL. Finally, a curved lower rail sits below the frame assembly. You can head over to the band saw and cut the curve on the bottom side of this rail. Stay to the outside of the layout line and sand to the line after you're done (Figures 4 and 5).

BRINGING IT TOGETHER. Working from the inside out, glue up the panels, stiles, and rails. Then attach the posts making sure not to forget the curved lower rail. Clamp everything together and let it dry.

DECORATIVE FRONT RAIL. The two side assemblies are connected with front and rear rails. To cut the profile on the front rail, see Figure 6.

MARRY THE SIDES. With the side assemblies dry, you can attach them to the case. Start off by laying the case on its back on the bench. Next, apply glue to the inside of the posts on one of the side assemblies. The side assembly is then positioned with the top and back flush to the case and clamped tight.

After the first side assembly is dry, you can glue the front and rear rails into their mortises. With these in place, repeat the process of gluing the other side assembly to the case and clamp everything together.

How-To: COMPLETE THE FRAMES

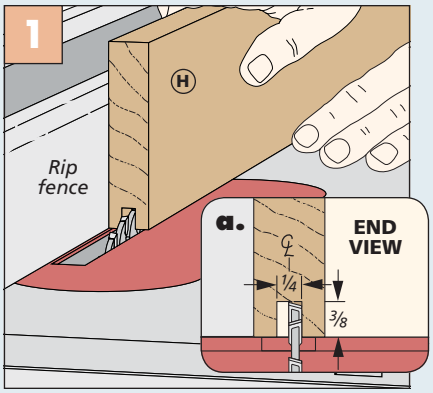

Grooves. Cut the grooves in the rails and stiles at the table saw. Flip pieces end-for-end to keep grooves centered.

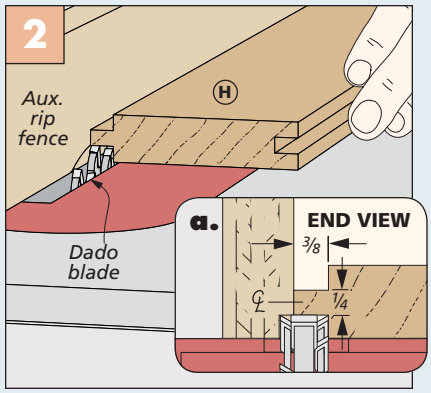

Tongue. Stay at the table saw and use a dado blade buried in an auxiliary fence to cut the tongue on the stiles.

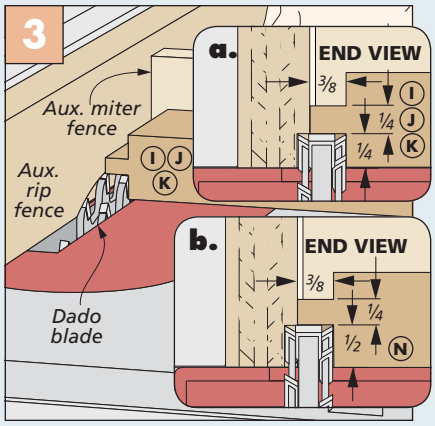

Stub Tenons. Using the same dado blade and auxiliary fence setup, cut the tenons on the rails with a miter gauge.

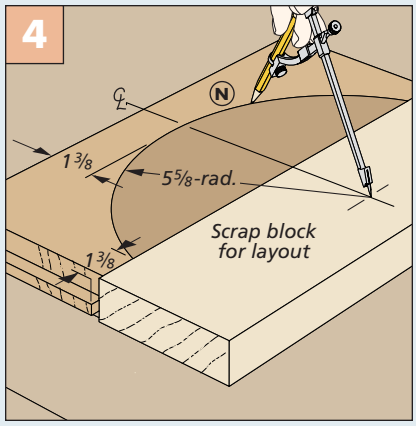

Side Arcs. Use a scrap block to mark your center point for the side arcs and use a compass to draw the arch.

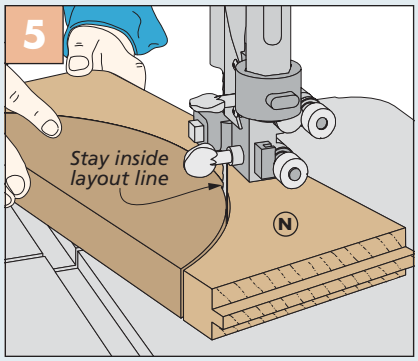

Cut Arcs. Cut the arc to shape at the band saw, staying just inside the layout line. Sand down to the line.

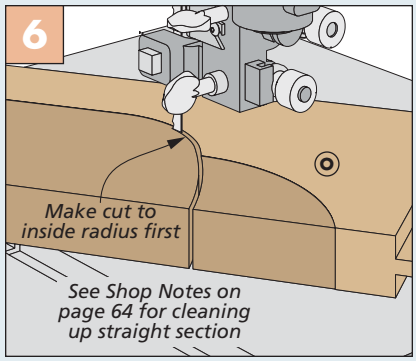

Front Rail. Cut the profile in the front rail at the band saw. Start with the larger arc first, then cut the smaller.

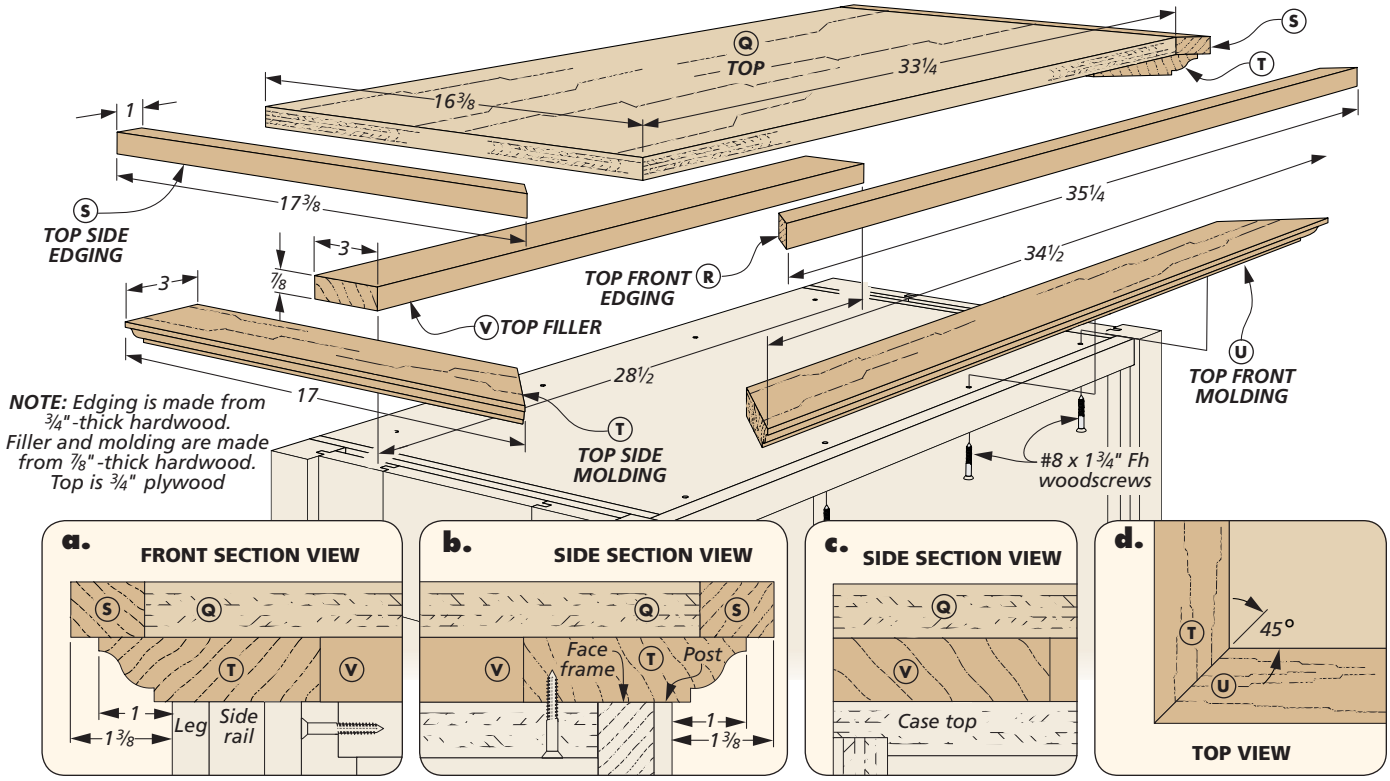

Construct the TOP & DRAWERS

The next order of business is to add a top to the linen press. I knew that I wanted to dress up the top and keep it true to the original. To do this, I built the top in a few separate pieces, like you see in the drawing above. This does a couple of things. First, it allows me to use plywood with hardwood edging for the top, instead of solid wood. Second, it allows me to add molding pieces below the top and rout a profile along the edge, making the top appear much thicker.

HARDWOOD-EDGED TOP. To start with, I cut the top out of a piece of plywood. Much like the case, you'll want to cover the edges of the plywood. After ripping the hardwood edging to size, miter the corners at the table saw and attach it to the top with glue.

MOLDING. Now, you can move on to the molding that wraps around the top. To create this molding, start with a piece of stock that is a little over 72" long. Rip the blank to width at the table saw but don't cut the miters yet.

At this point, you'll want to rout your profile along the length of the blank. This ensures that the profile will match perfectly around the entire top. With the profile routed, cut the molding to length and miter the ends.

ATTACHING THE TOP. Before installing the top on the case, I attached the molding to the top. Some glue and a few pin nails are the ticket here. The glue secures the molding to the top and the pin nails prevent the molding from slipping when clamps are applied. To offer support along the back edge of the top, I added a filler piece. The filler piece is the same thickness as the molding and is glued in place. With the molding attached, it's a simple matter of securing the top to the case with screws.

How-To: ROUT THE MOLDING & CUT MITERS

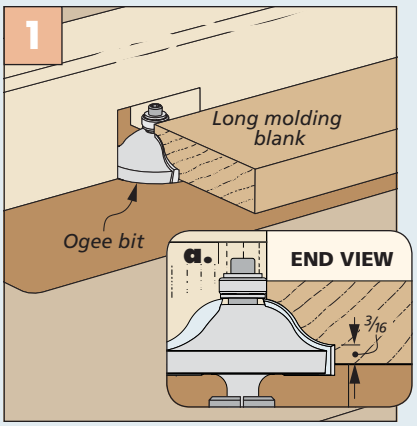

Rout Molding. With an ogee bit in the router table, rout a blank that is approximately 72" long.

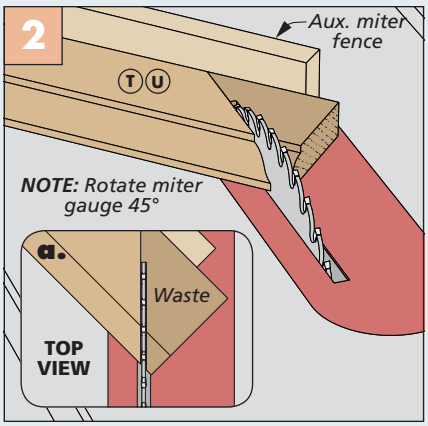

Miter Corners. Use an auxiliary fence on the miter gauge to cut the molding blank to the correct lengths.

DRAWERS

Now that the case has taken shape, you can start thinking about drawers. The case you built earlier has two openings for drawers — a large, lower drawer and a smaller, upper drawer. To match the rest of the linen press, the fronts of the drawers are made from quarter-sawn white oak. But the sides and the back of the drawer are made from hard maple. Some maple plywood will do for the bottom. The construction process is the same for both drawers.

DRAWER FRONTS. To keep a clean, seamless look on the front of the drawers, the drawer fronts are connected to the boxes using locking rabbet joints. The How-To box below walks you through all of the steps involved in cutting the locking rabbet joint. All that's needed is a table saw with a dado blade. These joints could also be cut at the router table with a straight bit.

DRAWER BOXES. With the locking rabbet cut on the drawer front and the matching tongue on the sides, you can finish out the drawer boxes.

To hold the plywood drawer bottom, a groove is cut along the bottom face in the sides, front, and back, as shown in detail 'c'. A dado blade in the table saw makes quick work of cutting the groove.

The back of the drawer is held in place with a shallow dado cut into the sides of the drawer. Again, a dado blade is the ticket here. Make sure to check your parts as you go and sneak up on a perfect fit.

ASSEMBLY. After the drawer parts are cut and the joinery is in place, you're ready to assemble the drawers. I started by prefinishing the fronts of the drawers. See page 51 for the finishing details. After the finish has dried, you can glue everything together. A pair of clamps across the drawer should be all you need here, but you can use a pair of long clamps to pull the drawers into square if they need a minor adjustment. Once the glue is dry, the drawer pulls can be installed (see Sources on page 67).

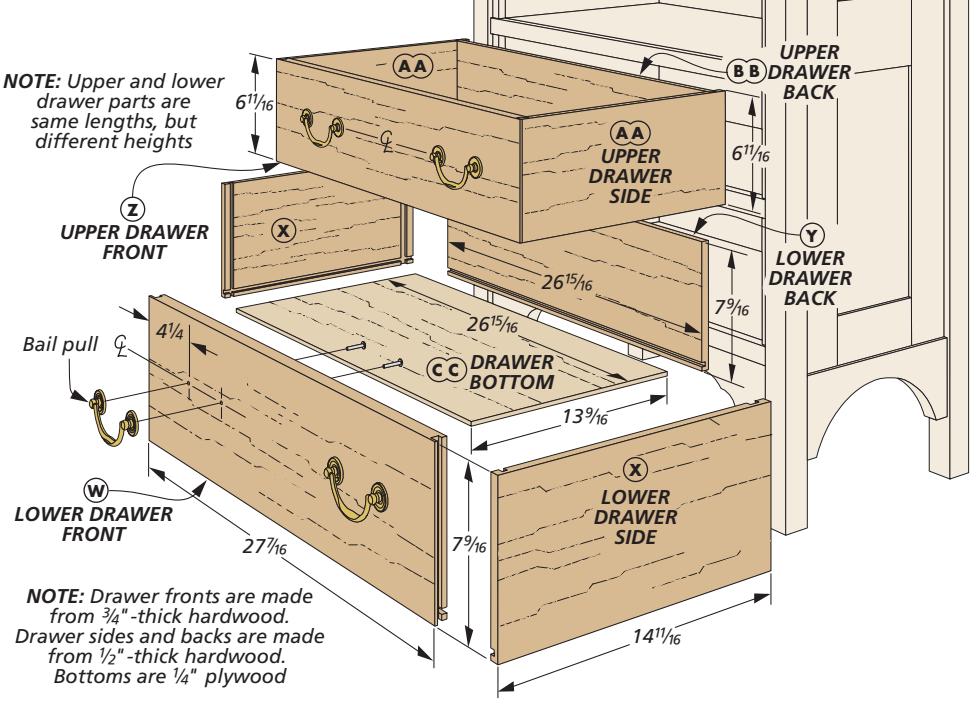

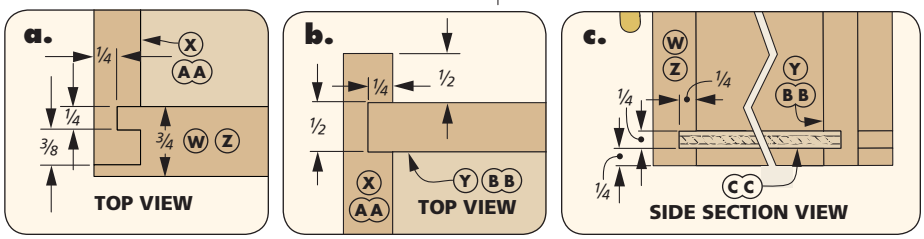

How-To: CUT THE LOCKING RABBET & DRAWER DADOES

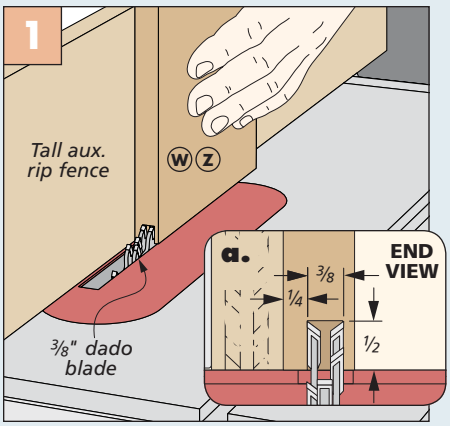

Groove. Use a tall auxiliary fence at the table saw and a dado blade to cut a groove on the end of the drawer fronts.

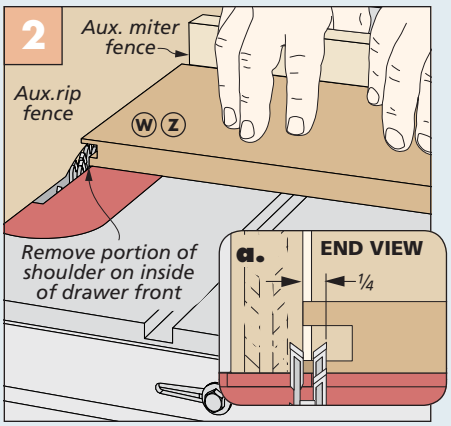

Cut a Tongue. With a miter gauge, remove the shoulder from the inside of the drawer front, creating a tongue.

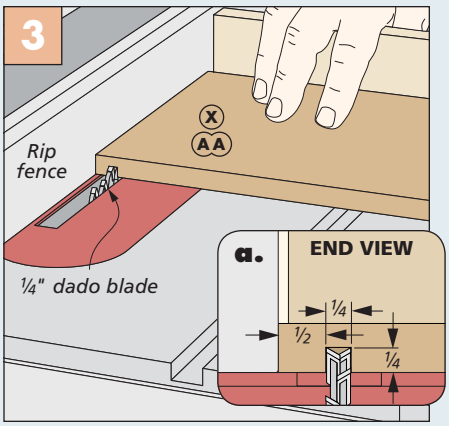

Dado the Sides. Remove the auxiliary fence and use a dado blade to cut a dado in the drawer sides.

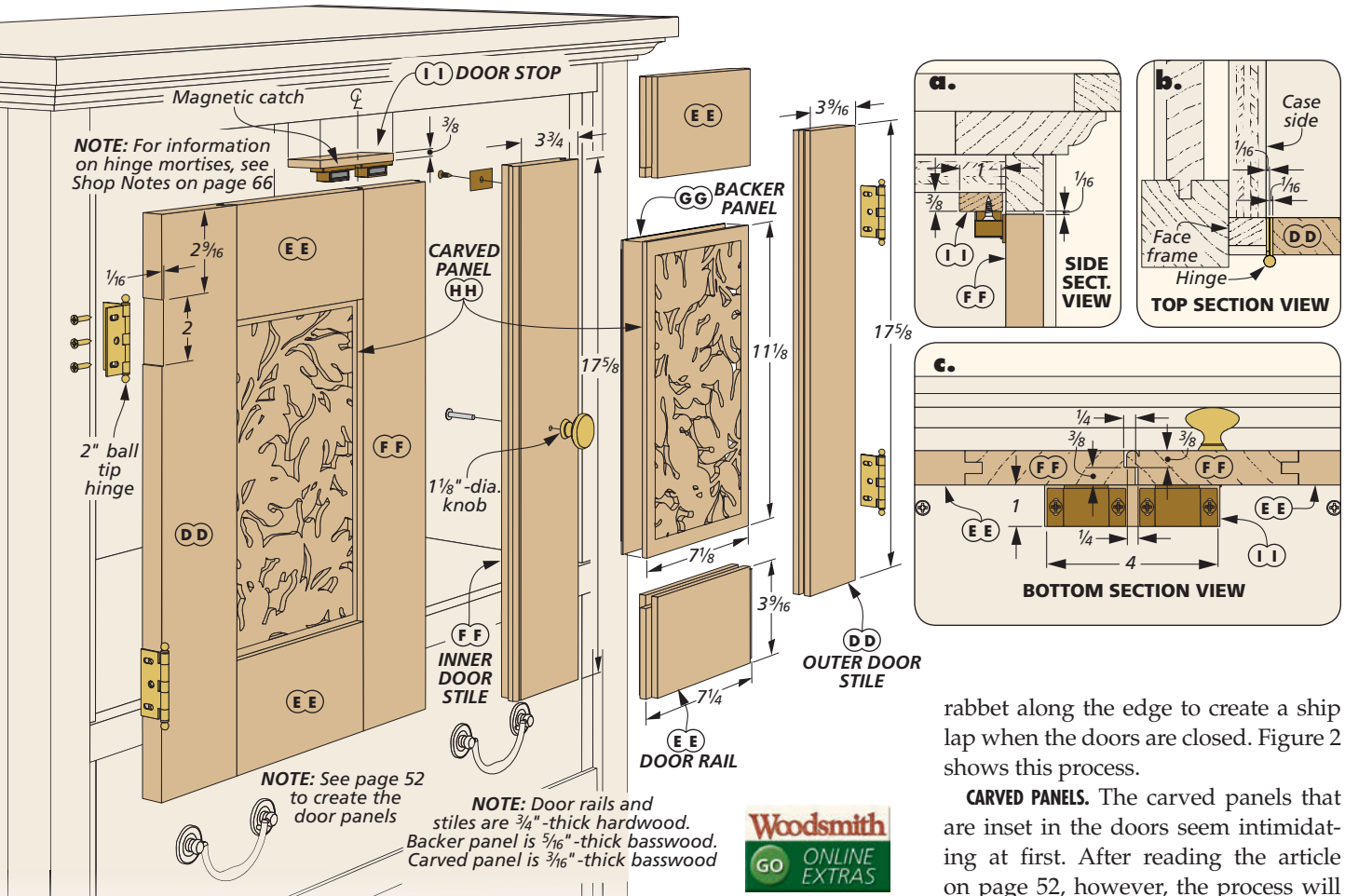

Woodsmith GO ONLINE EXTRAS

For full-size patterns for the door panels, go to Woodsmith.com

Build the DOORS

Undoubtedly, the focal point of the linen press is the doors. The eye-catching color on the carved panels stand out in contrast to the remainder of the piece. The doors are a simple construction, consisting of a frame and panel.

DOOR FRAME. The door frames utilize stub tenon and groove joinery. A decorative bead is cut on the router table on the right-hand inner stile. The details for the bead are shown in Figure 1. The inner stile of each door also receives a rabbet along the edge to create a ship lap when the doors are closed. Figure 2 shows this process.

CARVED PANELS. The carved panels that are inset in the doors seem intimidating at first. After reading the article on page 52, however, the process will be less mysterious. After the carved panel is complete, it's glued onto a pre-finished backer panel. The panels then receive a rabbet on the table saw using a dado blade. Figure 3 gives the details on this. To assemble the doors, start by pre-finishing the rails and stiles. After the frame dries, you can insert the panels and glue the doors together.

How-To: PANEL RABBET & DOOR BEAD

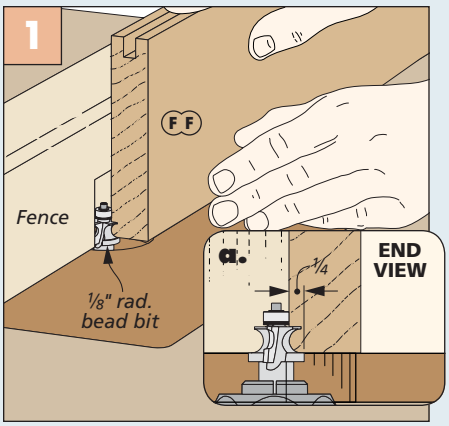

Cutting Bead. At the router table, use a beading bit to cut a bead on the outside edge of the right inner door stile.

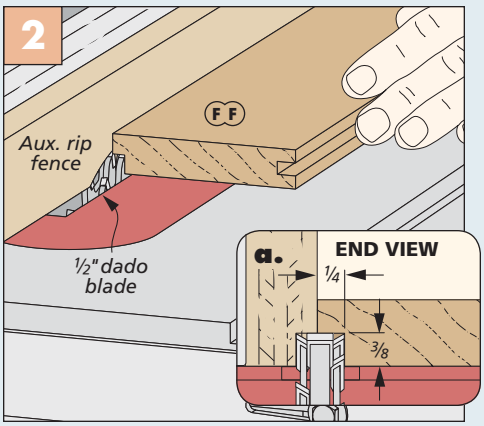

Rabbet Inner Stiles. With a dado blade and auxiliary fence, cut a rabbet on the inner rails so they'll overlap.

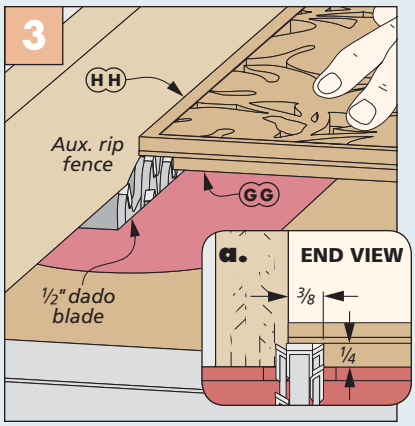

Rabbet Door Panel. Cut a rabbet on the back of the door panels at the table saw with a dado blade.

FINISHING

With the construction of the linen press complete, you can add hinges and a knob to the doors. Page 64 has details on mortising the hinges in the doors. The hinges aren't mortised in the cabinet, however. A door stop and a pair of magnetic catches are installed on the inside of the case to hold the doors closed.

FINISHING DETAILS. The entire linen press (with the exception of the carved panels) is finished with a tinted varnish, followed by multiple coats of *General Finishes Arm-R-Seal*.

To mix the tinted varnish, 16 parts of high-performance polyurethane water-based topcoat is mixed with two parts green water-based dye. The tinted dye is brushed on and allowed to dry for 24 hours. After drying, the entire cabinet was sanded with 400-grit sandpaper.

After sanding, three coats of *General Finishes Arm-R-Seal* was wiped on, sanding with 400-grit between coats.

With the final coat dry, the drawer pulls can be installed. Now, the only thing left to do is sit back and admire your work of art. W

▲ The carved doors on the linen press set it apart. To read more on making the door panels, check out page 52.

Materials, Supplies & Cutting Diagram

A	Sides (2)	3/4 ply. - 15 x 36 1/4
B	Case Bottom/Top (2)	3/4 ply. - 15 x 28
C	Dividers (2)	3/4 ply. - 14 1/2 x 28
D	Back (1)	3/4 ply. - 28 x 35 1/4
E	Face Frame Rails (4)	3/4 x 1 1/8 - 29
F	Face Frame Stiles	9/16 x 3/4 - 74 rgh.
G	Posts (4)	1 3/4 x 1 3/4 - 46
H	Side Stiles (4)	3/4 x 3 3/8 - 37 1/8
I	Upper Side Rails (2)	3/4 x 5 - 7 1/4
J	Middle Side Rails (2)	3/4 x 4 1/2 - 7 1/4
K	Lower Side Rails (2)	3/4 x 3 - 7 1/4
L	Upper Side Panels (2)	3/4 ply. - 10 3/8 x 7 1/4
M	Lower Side Panels (2)	3/4 ply. - 15 3/4 x 7 1/4
N	Curved Lower Rails (2)	1 x 5 - 13 1/4
O	Front Rail (1)	1 x 5 1/2 - 29 3/4
P	Rear Rail (1)	1 x 2 1/8 - 29 3/4
Q	Top (1)	3/4 ply. - 16 3/8 x 33 1/4
R	Front Top Edging (1)	3/4 x 1 - 35 1/4
S	Side Top Edgings (2)	3/4 x 1 - 17 3/8
T	Side Top Moldings (2)	7/8 x 3 - 17
U	Front Top Molding (1)	7/8 x 3 - 34 1/2
V	Top Filler (1)	7/8 x 3 - 28 1/2
W	Low. Drawer Front (1)	3/4 x 7 9/16 - 27 7/16
X	Low. Drawer Sides (2)	1/2 x 7 9/16 - 14 11/16
Y	Low. Drawer Back (1)	1/2 x 7 9/16 - 26 15/16
Z	Upp. Drawer Front (1)	3/4 x 6 11/16 - 27 7/16
AA	Upp. Drawer Sides (2)	1/2 x 6 11/16 - 14 11/16
BB	Upp. Drawer Back (1)	1/2 x 6 11/16 - 26 15/16
CC	Dwr. Bottoms (2)	1/4 ply. - 13 9/16 x 26 15/16
DD	Outer Door Stiles (2)	3/4 x 3 9/16 - 17 5/8
EE	Door Rails (4)	3/4 x 3 9/16 - 7 1/4
FF	Inner Door Stiles (2)	3/4 x 3 3/4 - 17 5/8
GG	Backer Panels (2)	5/16 x 7 1/8 - 11 1/8
HH	Carved Panels (2	3/16 x 7 1/8 - 11 1/8
II	Door Stop (1)	3/8 x 1 - 4

- (1) Knob
- (4) Bail Pulls
- (2 pairs) 2" Door Hinges w/screws
- (2) Magnetic Catches with Plates
- (24) #8 x 1 1/4" Fh Woodscrews
- (8) #8 x 1 3/4" Fh Woodscrews

1/2" x 7" - 60" Hard Maple (2.9 Sq. Ft.)

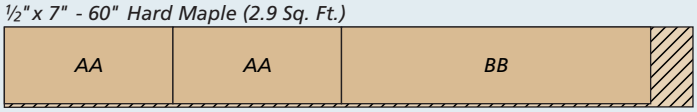

1/2" x 4" - 48" Basswood (Two Boards @ 1.3 Sq. Ft. each)

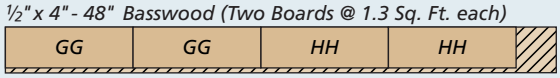

1/2" x 8" - 60" Hard Maple (3.3 Sq. Ft.)

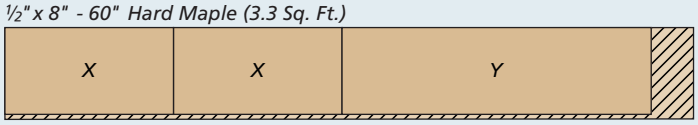

ALSO NEEDED: *One 48" x 96" sheet of 3/4" white oak plywood*
One 24" x 24" sheet of 1/4" hard maple plywood

3/4" x 7" - 96" White Oak (Two Boards @ 4.7 Bd. Ft. each)

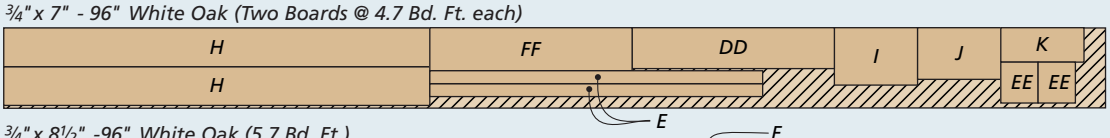

3/4" x 8 1/2" -96" White Oak (5.7 Bd. Ft.)

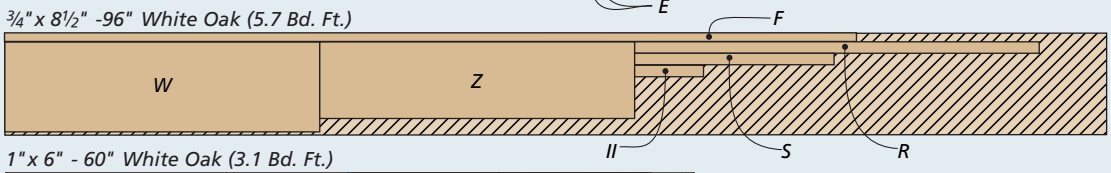

1" x 6" - 60" White Oak (3.1 Bd. Ft.)

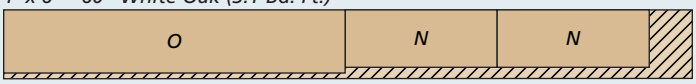

1" x 6 1/2" - 84" White Oak (4.7 Bd. Ft.)

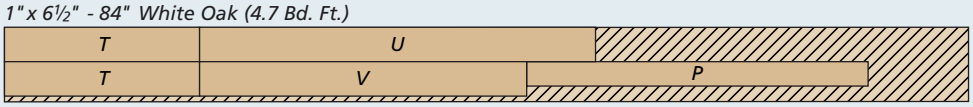

1 3/4" x 4" - 96" White Oak (5.3 Bd. Ft.)

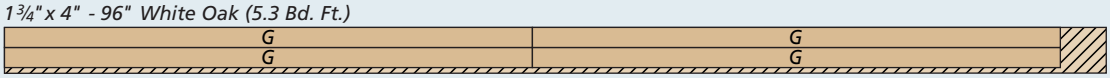

Relief-carved Panels

The doors for the Brydcliffe-inspired linen press on page 42 look intimidating at first. However, what appear to be relief-carved panels turn out to be something a little different. Let me explain. The panels are comprised of two parts. The first is a front panel that has had a little work done. You'll start by using a scroll saw to remove the waste, then you'll use some simple carving tools to soften the profile and create detail. After paint is applied, the carved panel is adhered to the second part of the puzzle —a backer panel. When paired with the carved panel, this gives the appearance of a relief-carved door with a fraction of the work.

BASSWOOD BLANKS. The blanks that are used to create the door are best made using wood that is soft and easy to cut on a scroll saw. Here, I've chosen 3/16"-thick basswood for the carved panels and 5/16"-thick basswood for the backer panels. You could choose another type of softer hardwood, such as poplar. The four blanks are milled to final dimensions and the backer panels are set aside.

PATTERN. As with most scroll saw work, I started with a pattern. The patterns I used can be seen at left. Note that there are two different patterns—one for the right door and one for the left door. These patterns can either be enlarged from this page, or you can download and print full-sized versions at *Woodsmith.com*.

MOUNTING THE PATTERN. To attach the patterns to the basswood, apply a thin, even layer of spray adhesive over the entire back of the pattern. Center it on the blank and press down firmly (Photo 1 at the top of the next page). By using a thin layer of spray adhesive, the pattern stays in place, but is easy to remove when the time comes.

PATTERN ***LEFT*** *(Enlarge 400%)*

PATTERN ***RIGHT*** *(Enlarge 400%)*

Woodsmith GO ONLINE EXTRAS Full-size patterns for the relief-carved panels are available at Woodsmith.com

DRILL STARTER HOLES. Because none of the waste that needs to be removed at the scroll saw is on the edge of the blank, you'll first have to drill access holes for the scroll saw blade. At the drill press, I used a ⅛" brad-point bit to drill the access holes through the panel, as you see in Photo 2, below. Remember, the waste that you're removing is the dark-colored sections of the patterns. I like to keep my access holes towards the middle of each waste section so that if any splintering occurs on the back side, it's unlikely that it will reach the edge of my cut.

THE SAW. After the access holes are drilled, you're ready to move over to the scroll saw. Before we start sawing, however, there are a few things to pay special attention to. First, take a look at the scroll saw blades you have. To saw the delicate, thin basswood that these panels are made from, select a scroll saw blade that has a medium tooth — a #4 blade should be just about right. If you don't have a lot of scroll saw experience, a spiral blade cuts in any direction and can provide good results, also.

The second thing to check on is blade tension. A good rule of thumb is that the blade, under proper tension, should flex no more than ⅛" in any direction. Minimal blade deflection aids in keeping the blade on the cut line.

Apply spray adhesive to the back side of the pattern. Align it so that it's centered on the blank and press it firmly in place. Using light coats of the spray adhesive will ensure the pattern stays on the blank but is easy to remove when all of the sawing is complete.

HOW WE SCROLL. With the proper blade selected and the tension set, you're ready to start sawing. Begin by removing the waste from the smaller sections that are around the perimeter of the blank. With a spiral blade, you can keep the workpiece in a fixed orientation and the blade will cut in any direction you move the workpiece.

Although you're trying to follow the pattern and remove only the dark portions, it's okay if the blade strays a little. The pattern that you're cutting out is leaves after all, and nature isn't always smooth and symmetrical. If your cut veers off course, just cut gracefully back towards the pattern. You'll be refining the edges with some files a little later, so any mistakes can be smoothed out.

After all of the waste is removed from the smaller perimeter sections, you can move to the smaller waste sections in the middle of the panel (Photo 3). By removing the small sections first, the remaining larger sections help maintain the strength of the panel. Once both panels are complete, it's time to clean up the saw marks on the edges and add a little detail.

Drilling a hole in the center of the waste area accomplishes two things. First, it keeps any chipout away from the edges. Second, it allows you to feed the scroll saw blade through it.

If you notice that the scroll saw blade isn't cutting well and is harder to control, it's time to change to a new blade. Sharp blades aid in cutting close to the pattern, without going over the lines.

A V-gouge makes quick work detailing the veins on each leaf. Make sure it's sharp so cleanly slices through the pattern and stock. Use a chip carving knife to soften and bevel the leaf edges.

Clean up sawn edges with small rasps and files. Working directly over an open dog hole on your benchtop ensures firm support of the workpiece, with plenty of room for your file.

ADD SOME DETAIL

Even using a fine scroll saw blade leaves a little clean up work left to do. So, it's time to pull up a seat at your workbench and do some detail work. The first order of business will be to add some detail with a gouge, as well as clean up the scroll saw blade marks.

A LITTLE CARVING. Before I remove the pattern from the leaves, I want to first use the red lines on the pattern to cut some detail into the leaves. Using a small V-gouge, carefully cut in veins on each leaf (Photo 1, above). Outline any leaves that are overlapping using the same technique so they can be distinguished from one another. To create a border around the entire panel, I used a straightedge to guide my gouge, but you could freehand it if you're comfortable.

DIMENSION. Once all of the veins are cut, the pattern can be removed. Then, I used a sharp chip-carving knife to lightly bevel the edge of each leaf and stem. This adds dimension to the carving. Remember, the blank is thin, so be careful not to remove too much material.

A LITTLE SANDING. To clean up the insides of each leaf and remove any blade marks from the scroll saw, I grabbed a small half-round file, a few fine needle files, and some smaller rasps (also known as rifflers). Position the panel over a bench dog hole and work on each edge with the file protruding down into the dog hole. Working into the dog hole allows the carved panel to have support on the bench as you work. You can see this in Photo 2 above.

Prepare the panels for paint by applying a thin base coat of water-based sealer. When that's dry, lightly sand the panels to remove any raised grain.

How-To: PAINTING RELIEF-CARVED PANELS

After painting the stems a day in advance, start painting, referring to the paint-by-number guide.

With the paints still wet, begin blending the colors using a wide artist's brush and clean water.

Use a sharp watercolor pencil to color in the V-gouge grooves and then blend with water.

After the shaping is complete and the edges have been softened, sand the entire panel, front and back. Before you add color, give the entire panel a coat of water-based sealer and, once dry, lightly sand down any raised grain (Photo 3 on previous page).

HAPPY LITTLE LEAVES

At this point, your panel looks a little lifeless, but you'll soon fix that. What's needed is some watercolor paint, but not the cakes you used in grade school. I chose to use tubes of watercolor paint from an art supply store, along with a water color pencil for the veins. See Sources on page 67 for where I got mine.

The trick with these watercolors is to use a little bit of water with the paint, and after it's applied to the wood, blend it down with water to a color you're happy with. Apply all the leaf colors at the same time and then blend them. Steps 1 and 2 in the box below show the process. As you can see to the right, we've created a "paint-by-number" with the palette we chose, but there's no right or wrong. After you're happy with your painting, use a sharp watercolor pencil dipped in water to outline the detail grooves cut with the V-gouge (Step 3).

BACKER PANEL. The watercolor takes a few days to fully cure, so in the meantime, apply a coat of water-based golden oak stain to both sides of the backer panels. Once that's dry, you'll want to mask off the edges and a few areas where the carved leaves overlap the panel (Step 4 below). This will help ensure a good glue bond by not allowing any finish in these areas. Next, the backer panels (with masking) and the carved panels receive multiple thin coats of varnish and are allowed to dry.

To tone down the intensity of the painted panel, I applied a brown glaze to both backer and carved panels. This is shown in Step 5 below. After the glaze is dry, all that's left to do is to remove the masking tape and glue the panels together, as Step 6 shows.

As you can see, creating a painted, "carved" panel isn't hard. All it takes is a little time, patience, and a paint brush. W

— Logan Wittmer

PAINT-BY-NUMBER

LEFT PANEL

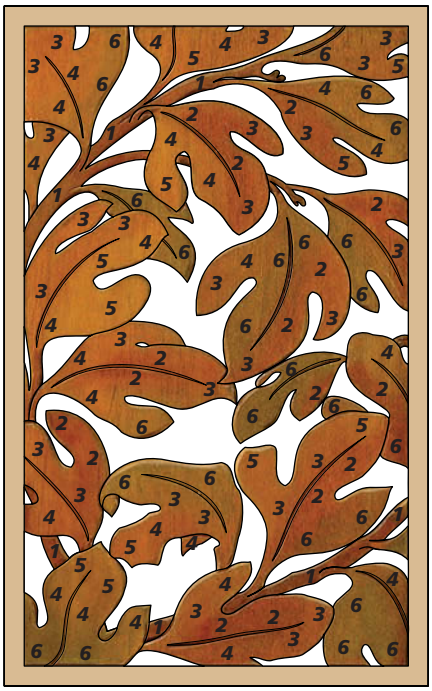

RIGHT PANEL

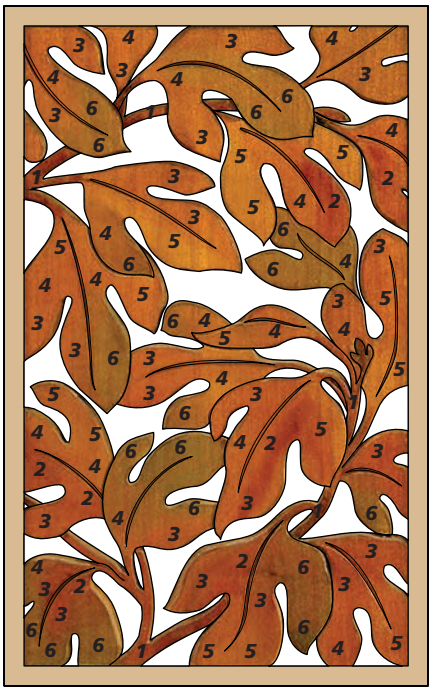

1 = Burnt Sienna	***3*** = Cadmium Orange	***5*** = Cadmium Yellow
2 = Cadmium Red	***4*** = Yellow Ochre	***6*** = Sap Green

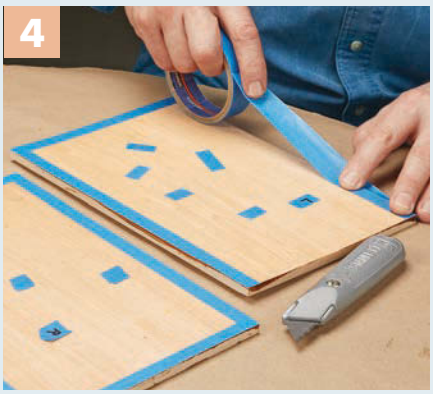

4

For glue integrity, mask edges and behind leaf areas on the backer panel before applying finish.

5

Apply brown glaze to the face of the carved and backer panels. Wipe glaze off immediately.

6

Remove the tape from the backer panel. Glue can then be applied and the panels clamped together.

5 tips to get more from your Jig Saw

▲ Numerous types of blades are available for the jig saw covering a host of different materials.

Many woodworkers don't view the jig saw as a "fine" woodworking tool, and would instead opt to use a band saw whenever possible. But on those occasions when a workpiece is too large to handle at the band saw, a jig saw allows you to take the tool to the workpiece. The jig saw can even do a few operations that the band saw isn't able to perform. Here, I'll look at a few of my favorite tips that'll allow you to get the most from your jig saw.

[1] Blade Selection

Perhaps the best thing about the jig saw is that it's not just for cutting wood. Equipped with the right blade, the jig saw can be put to use cutting a multitude of materials. From ceramics to metal and a host of material in between, there's probably a jig saw blade available to cut through it. The photo at left shows just a few blades that are helpful to have on-hand — a coarse wood blade for rapid cuts, a fine wood blade for cleaner cuts, an all-purpose blade that can cut through the occasional nail, a metal-cutting blade, and even one specifically designed for cutting PVC.

Because jig saw blades are relatively inexpensive (and are even sold in variety packs), it's easy to keep an assortment of blades in the shop. This will mean you're more likely to grab the right one for the material you need to cut. With the correct blade installed for the material, now I'll focus on the actual operational tricks that make the jig saw such a useful tool.

[2] Relief Cuts

Everyone knows that cutting curves is right in the jig saw's wheelhouse. But what happens when a curve is too tight?

You might run the risk of pinching the saw blade or burning the material. To avoid this scenario, you can make relief cuts to ease the turn. Take a look at the main photo on the previous page to see what I mean when cutting a small diameter circle.

Here, I drilled a hole in the center of the circle large enough for the blade to fit through and then made several straight cuts radiating from the center. Stop just short of the edge. You can then come back and cut the curve, just snipping off each wedge without fear of pinching the blade.

While the quality of the cut isn't critical, you'll want to stay on the waste side of the curved layout line.

With the bulk of the waste removed, add a template and clean up the cut with a handheld router and flush-trim bit.

[3] Prepare for Flush Trim

There are also plenty of situations that call for cutting a curve where a clean, splinter-free surface isn't the priority. The most common job is when you simply need to remove waste quickly in preparation for routing an edge with a flush-trim bit. In these situations, the idea is to make a quick cut, staying just outside the layout line (upper left photo).

With the bulk of the waste removed, you can apply a template or pattern to the workpiece and create a clean edge with a router bit, as shown in the upper right photo. This is the perfect example of using two tools in collaboration to achieve a great result quickly.

[4] Cutting an Internal Opening

Another area where the jig saw excels is creating cutouts on panels when an opening is in the middle of a workpiece, such as a router insert plate opening (lower left photo). The jig saw is the go-to tool in this case.

For this common operation, you'll first define the corner openings by drilling large, through holes. Here, the goal is to use a Forstner bit that matches the radius of the corners on the router plate.

You'll then come back with the jig saw to remove the interior waste. And since the cut edge will be visible, a fine-cutting blade is important here for a nice, clean edge.

[5] Do No Harm

One common knock against jig saws is that most have a metal foot that, over time, can get rough or rusty through use. This creates the potential for damaging finer materials they come in contact with (think laminates and veneers). Some jig saws, like the *Bosch* model shown in the photo below, come with an auxiliary plastic foot that easily snaps in place when needed. Another option is to use masking tape to cover the foot to protect these materials.

And speaking of tape, you'll note that most jig saw blades are designed for cutting on the up stroke. So whenever possible, place the good face down. But if that's not possible, you can help alleviate tearout by taping the surface to keep the splinters in check (inset below).

Even though the jig saw may not be viewed as a "fine" woodworking tool, it certainly has its place in the shop. Just employ a few good strategies before making the cut and you're sure to get excellent results every time. W

— Robert Kemp

Use a Forstner drill bit that matches the radius of the router plate to define the corners of the opening. The jig saw makes quick work removing the rest of the material.

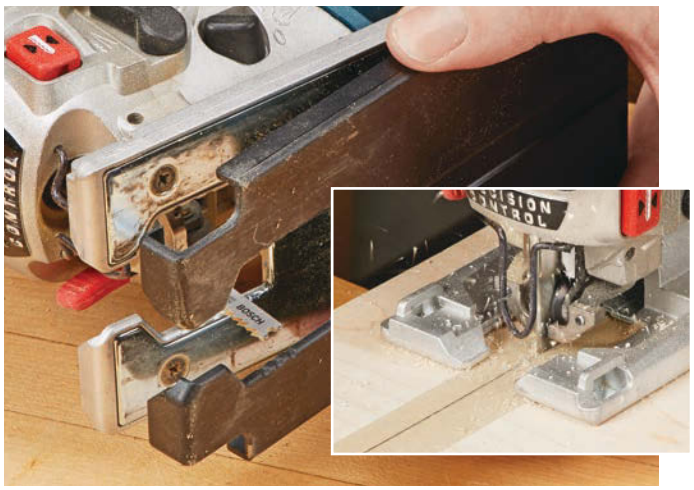

Some jig saws are supplied with a plastic foot that snaps over the metal base. This helps protect delicate materials. And for even better cuts, use masking tape to cut down on splintering (inset).

Commonly asked Woodworking Questions

If you spend much time reading through woodworking forums on the internet, you probably already know that certain questions tend to come up again and again, often sparking a lively debate. Here's a look at five of the most commonly asked woodworking questions, along with a run-down of the pros and cons on each side of the issue.

LEFT-TILT VS. RIGHT-TILT TABLE SAWS

For years, the question that faced any woodworker shopping for a new table saw was whether to get a right-tilt or left-tilt saw. The main argument for left-tilt saws is that they're safer and more convenient to use because the blade tilts away from the rip fence (photo above). This allows you to leave the rip fence in the customary position to the right of the blade when making a bevel rip cut.

If you own a right-tilt saw, you have to move the rip fence to the opposite side of the blade in order to make a bevel rip cut safely. But ask yourself how often you actually tilt the blade to make a cut? If you can't remember the last time you did, then the question becomes a bit of a non-issue in my book. Either one will work fine, provided you're mindful of the proper setup for the cut you're making. Despite this, the left-tilt proponents appear to have won the advantage on this argument, as most of the table saws on the market today are left-tilt.

▲ Using hand tools requires some time and patience in order to develop proper skills, but many woodworkers find them rewarding to use. Power tools tend to give consistent results right out of the gate, even if you're relatively inexperienced at using them.

HAND TOOLS VS. POWER TOOLS

When it comes to tool selection, some woodworkers on the internet divide up into one of two camps — those who use power tools and those who use hand tools (photos at left). Power tool users often tend to think hand tools are slow

and difficult to use. They maintain that you can get the job done faster, with greater accuracy and less effort, by using machines. For woodworkers who are older or have physical limitations such as arthritis, hand tools may not even be an option.

Hand tool users are quick to point out that hand tools are quieter, create less sawdust, don't take up as much space, and are just downright more enjoyable to use than power tools. They'll also argue that you don't get the same feedback from the wood when using power tools as you do when using hand tools.

I use both hand tools and power tools in my shop. And I've never really understood why anyone would want to limit themselves to one or the other. Instead, I prefer to match the tool to the job at hand. For delicate tasks such as fitting joinery or striking a narrow bead on the edge of a board, I enjoy the quiet satisfaction that comes with using hand tools. But if I have a stack of boards to rip down to width, you can bet that I'll be firing up my table saw.

PLANER OR JOINTER FIRST?

When it comes to dimensioning stock, the jointer and the planer work in tandem to create perfectly flat, square boards, as shown in the upper right photos. The jointer establishes an initial flat face on a board. Then the planer is used to bring the stock to final thickness.

Because the jointer is typically used before the planer, you might think that is the tool to purchase first. But if I could only have one, I'd choose a planer.

▲ Water-based finishes tend to dry completely clear, while oil-based finishes impart a warm, amber tone to the wood.

▲ Working together, a jointer and a planer are ideally suited to handle the task of dimensioning stock. The jointer creates a flat, reference face on a board. Then the planer is used to create a parallel face and bring the board down to the desired thickness.

The reasoning for this is that most of the time, I'm working with stock that has already been surfaced (even if only roughly) and straight-line ripped at the sawmill. So more often than not, I'm using my planer simply to turn thick boards into thinner ones. No other tool in the shop can do this as quickly and effortlessly as a planer.

WATER-BASED FINISHES

When water-based finishes first appeared on the market, they left a lot to be desired in terms of durability. But they've come a long way over the years, and the better ones can stand toe-to-toe with oil-based finishes. On top of that, they dry quickly, clean up is easy, and you don't have to worry about fumes if you're working inside.

The downside is that compared to their oil-based cousins, water-based products require more coats to build up a finish. And perhaps even more importantly, water-based finishes tend to dry completely clear, leaving the wood looking somewhat cold and lifeless.

A compromise is to apply an oil-based finish as an initial coat to impart a warm tone to the wood. Then you can apply one or more coats of a compatible water-based product to build up the protective finish layer.

WHICH SHARPENING METHOD?

It seems like every few years, a "new" sharpening method comes into vogue and promises to be the end-all of sharpening. Waterstones, oilstones, diamond plates, ceramic stones, diamond paste, sandpaper on glass, and power sharpening machines all have their proponents (lower photos at right).

▲ Waterstones (upper photo) cut quickly, but require periodic flattening. Oilstones are slower, but stay flat for years.

The fact is that any of these methods will work. Each one comes with its own set of pros and cons, though. Some work quicker than others, some have a shorter learning curve, and some have a lower initial cost. But they all get the job done.

No matter which system you select, the important thing is to pick one method and stick with it long enough to become proficient. Sharpening skills improve with practice and the more time you spend mastering those skills, the better your results will be. W

– Vincent Ancona

Sandpaper Sharpening

Sharpening is one of those tasks many woodworkers approach with apprehension. And that's understandable; the entire process can be confusing. But when it comes down to it, sharpening is really about two things – a basic tool kit and a simple sharpening process.

A BASIC KIT

It doesn't take much to put together a basic kit of sharpening tools and supplies. To start with, you'll need an abrasive that will cut metal. There are a lot of options available, from water and oilstones to diamond plates and paste. But the simplest solution for me was sandpaper. Sandpaper probably isn't the first thing you think of when it comes to sharpening, but it works fast and doesn't cost much to get started.

THE GRITS. A sequence of grits is the key. To start the process, I use aluminum oxide sandpaper in 150- and 220-grit. (I like the adhesive-backed roll type.) It's the perfect choice for flattening the back of a chisel (or plane iron) and shaping the bevel. Then, using silicon carbide sandpaper in 400-, 800-, 1500-, and 2000-grit for the final honing brings the surfaces to a mirror finish.

FLAT SURFACE. The only challenge with sandpaper is keeping it flat as you use it. Unlike other sharpening media, sandpaper needs to be attached to a flat, stable surface. I like to use a piece of plate glass (about 10" x 30"). But any flat surface, like a piece of tile or a section of granite countertop, works great.

There are a couple more things you'll want to have on hand. Attaching the adhesive-backed aluminum oxide sandpaper to the glass is simply a matter of pressing it in place. But you'll want a can of spray adhesive to secure the silicon carbide paper. While you can use both types of sandpaper dry, I find they last longer if you keep things lubricated with water. A spray bottle filled with water is the solution here.

A sharp edge is achieved by honing two intersecting planes: The back and the bevel

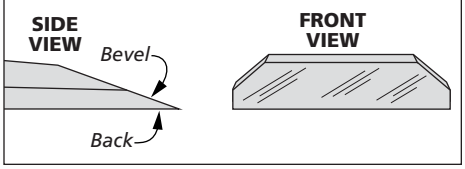

MUST-HAVES. The last two items are the key to great results — a honing guide and a bevel-setting gauge (for more on this, check out the box on the opposite page). The honing guide (I use a simple *Eclipse*-style version) keeps the chisel (or plane iron) at a consistent angle while you work. This way, you end up with a flat, smooth bevel more quickly. And the bevel-setting gauge ensures that every time you place the chisel in the honing guide, it always establishes the correct angle.

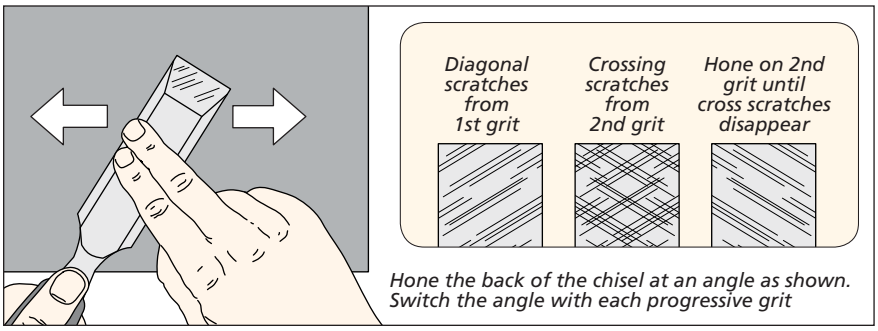

Hone the back of the chisel at an angle as shown. Switch the angle with each progressive grit

▲ You'll find it only takes a few minutes to turn a new or dull chisel (left) into a razor-sharp cutting tool (right).

A SIMPLE PROCESS

With your sharpening kit put together, creating a sharp edge is a simple process of flattening and smoothing both the back of the chisel, as well as the bevel. You'll refine those surfaces to remove the grinding marks and replace them with smaller and smaller scratches, ultimately ending with a mirror-like surface (photo at upper right).

FLATTEN THE BACK. To do that, start with the 150-grit sandpaper and flatten the back face. Lay the chisel down against the paper at an angle and move it side to side along the length of the strip of sandpaper. When you have an even scratch pattern on the surface (drawing above), you're ready to move to the next grit. The procedure here is the same, but I like to angle the chisel in the opposite direction. This makes it easier to see the new scratch pattern (center drawing). Once the old marks are gone (right drawing), keep repeating the process as you work up to 2000-grit.

HONE THE BEVEL. The next step is to follow the same sequence on the bevel. Here's where the honing guide comes in handy. By clamping the chisel in the guide, you create a consistent angle. I like to keep my chisels and plane irons at the factory angle. And to ensure I always set it in the honing guide the same way every time, I use a simple, shop-made jig (box below).

With the chisel set up in the guide, you'll refine the bevel's face starting with the 150-grit sandpaper like before. You'll find this part of the process goes pretty quick and shouldn't take more than a couple of minutes to remove the existing scratches. While you can work back and forth along the length of the sandpaper, I like to pull the chisel back along the paper to avoid any chance of digging into the paper and tearing it up.

You'll know you're finished at each particular grit when you feel a small burr along the back face of the chisel. This indicates you've removed metal right up to the edge. Here, I like to remove the burr by laying the chisel flat on the final grit of paper and pulling it toward the edge of the paper. When the burr is gone, you're ready to proceed to the next grit. Follow the same process, removing the burr each time. Here again, a minute or two at each grit should be all it takes.

That's it, your chisel is ready for use. As you work with the chisel, you'll find it's easy to maintain the edge with some simple touchup work that won't take more than a few minutes. W

– Bryan Nelson

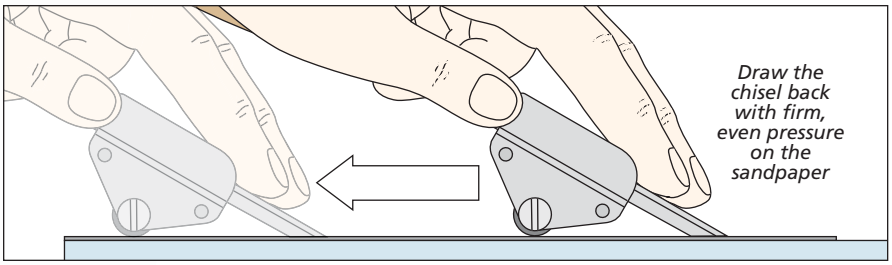

How-To: HONING GUIDE SET-UP GAUGE

The key to quick and easy sharpening is positioning a chisel (or plane iron) in your honing guide identically every time for a specific angle. The simplest way to do that is to use a bevel-setting gauge like the one shown at right.

The jig is just a plywood base with hardboard strips glued to the top. The strips act as stops for the edge of the chisel (or plane iron) for common sharpening angles. With the chisel resting against the stop and flat on the base, slide the honing guide up against the base and lock everything in place. Now it's ready for use.

▲ The gauge makes quick work of accurately positioning your chisel or plane iron in the honing guide each time.

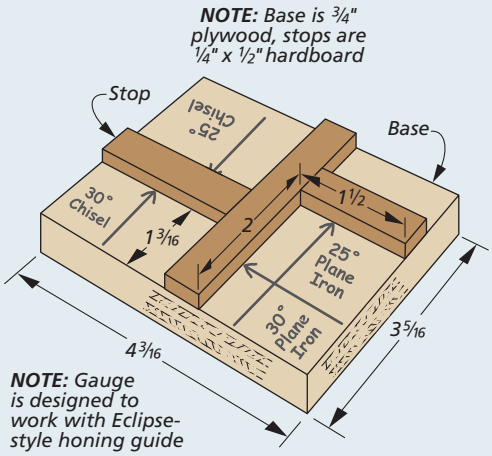

Consistent cuts with Featherboards

During the decade or so that I made my living as a trim carpenter, I never once used a featherboard. I've ripped miles of hardwood, softwood, and lumber that I probably shouldn't have cut on my table saw. It wasn't that I didn't want to take the time to set up a featherboard. There was rarely, if ever, one on the jobsite. But as a woodworker, it's a different story.

IN THE SHOP. I became a convert for one main reason — consistent, controllable quality. Yes, I know safety is important, and it's part of the equation. But the biggest reason I'm a fan of featherboards is how they help my old table saw shine. I still use the saw that I cut all those miles of boards on — an old *Rockwell* 9" table saw that suits me just fine.

The saw rattles and hums along okay for its age, but when I wanted to make more precise, smoother cuts, I needed to find a way to control some of the vibration of the saw. To my surprise, a cheap and quick remedy I found for this problem is a featherboard.

FEATHERS. We've all come across that stray feather in the yard and admired how beautifully the barbs move — in one direction. That's where this jig gets its name, and it also pretty much describes how it works. The flexible fingers of a featherboard guide the workpiece in one direction.

When a featherboard is properly installed on your table saw, you hardly know it's there. In fact, if you're using one for the first time, the whole thing might seem a little underwhelming. That is until you turn the saw off and examine the board you've just cut. The board bears a long, smooth, clean edge. That's the worth of a featherboard. It holds the workpiece firmly against the fence through transitions. Whether that transition is you shifting your hands to feed the board through the blade, or that the board has a bow that wants to pull away from the fence. The featherboard takes control of the situation. Here's how to set it up to get good results.

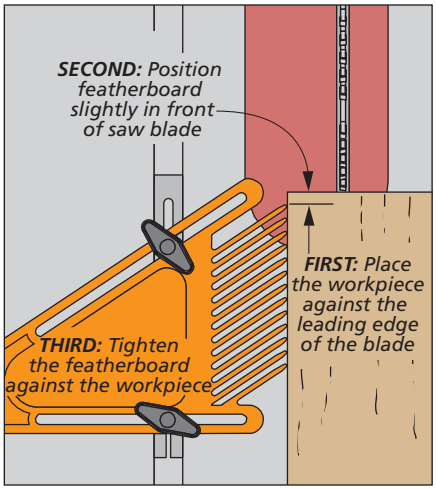

LOCATION. The drawing on the previous page shows an example of how to position a featherboard on your table saw. The overall goal is to hold the workpiece firmly (not too firm) against the fence while it's being fed through the blade. Placing the front edge of the featherboard slightly in front of the blade is proven to be the sweet spot for a quality cut. Too close to the blade, and you'll pinch the board and blade together. Much farther back, and the featherboard won't be effective at all.

PRESSURE. It might be tempting to put a lot of pressure on the board. But all that's really needed is enough pressure so that the board doesn't move.

Referring once again to the drawing on the previous page, let's walk through the process. Place the workpiece against the fence with the front end touching the blade. Drop the featherboard into the miter gauge slot and align the leading finger slightly back from the front of the board. Press the featherboard into the board until there's a slight flex in all the fingers, then tighten the jig in place.

USES GALORE. This two-step setup process applies regardless of how you're using a featherboard, like the example in the main photo. Here, the featherboard is going to help make the groove for a frame and panel door. You don't want any wandering in the groove that holds not only panels, but the tongue of a mating stile or rail, as well.

▲ Stacking featherboards spreads the pressure vertically across a greater area than a single featherboard. The two you see here were designed to stack and lock together tightly, one of the benefits of buying a commercially made featherboard.

ABOVE AND BEYOND. So far, both of the examples shown are operations involving cuts where the saw blade is set at about the same height as the thickness of the featherboard itself. But when you need to control a more complex cut, like the one you see in the photo above, you can stack the featherboards.

STACKING FEATHERBOARDS. Making raised panels on the table saw works fine, as long as you plan ahead. As you're cutting the panel, you don't want it to move or waver away from the fence. This will ruin the symmetrical look of the panel. Stacking a pair of featherboards takes care of this problem by holding more of the surface of the panel against the fence. The process of setting up stacked featherboards is the same as for a single one. First, align the featherboard, then tighten in place.

HOLD DOWNS. On occasion, when cutting rabbets or dadoes, you'll need to control the panel you're cutting in the other direction — down against the table. The featherboard has a close cousin that can aid you in this circumstance, a hold-down. In the box below there's a shop made hold-down that works great in most settings.

Adding featherboards and hold-downs to your shop jig lineup is a move you won't regret. And it's a lot cheaper than buying a new table saw. Which is a good thing — right? W

—Erich Lage

How-To: SHOP-MADE HOLD-DOWN

Hold-downs performs the same task as a featherboard. A hold-down applies even, consistent pressure to panels that might want to shift or rise up as they pass over a dado blade. All it takes is a piece of plywood and a thin strip of hardboard that acts as a spring. Install the hold-down following the same guidelines as the featherboard.

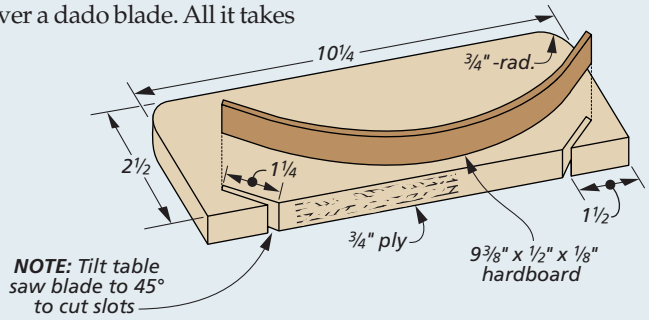

tips from our shop

Shop Notes

Cutting Shade Retainer Discs

The desk lamp shown on page 18 has two circular shade retainers that hold the lamp shade in its cylindrical shape. These retainers are nothing more than thin discs made from the same species of wood as the lamp's base assembly — walnut. To make them, I turned to my drill press outfitted with a heavy-duty circle cutter. This ensures a consistent result for both retainer discs.

TWO DISCS, ONE METHOD. As you'll notice, the lower shade retainer only has a small hole in the center sized for the lamp nipple. But the upper shade retainer has a larger hole in the center. This hole provides enough room to reach in and install a light bulb. Even though the discs have these differences, they both follow the same procedure.

SETUP & CUT. I started by setting my circle cutter to the proper radius to make the outside diameter cut first (Figure 1a). The blanks are held to a scrap board with double-sided tape. Then go ahead and make the cut for the lower retainer (Figure 1). If the centering drill bit in your circle cutter is smaller than the 3/8"-dia. hole needed in the lower retainer, it's easy to enlarge with the proper bit now. Now, secure the other blank to the scrap board with tape and make the same outside cut for the upper retainer. For the inner diameter cut, flip the cutter around in the circle cutter, reset the radius (Figure 2a) and make the cut (Figure 2).

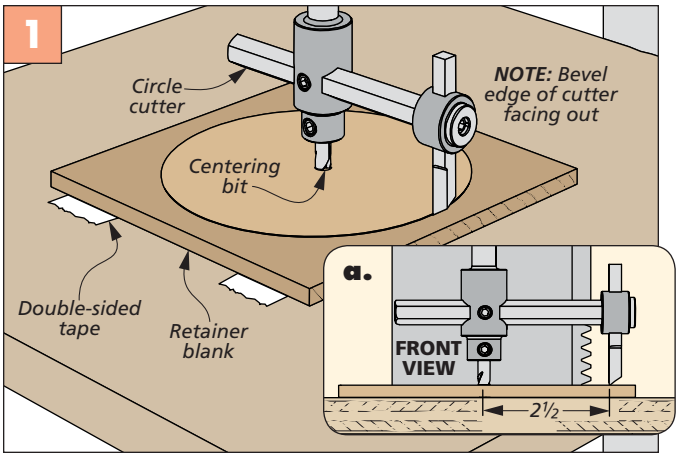

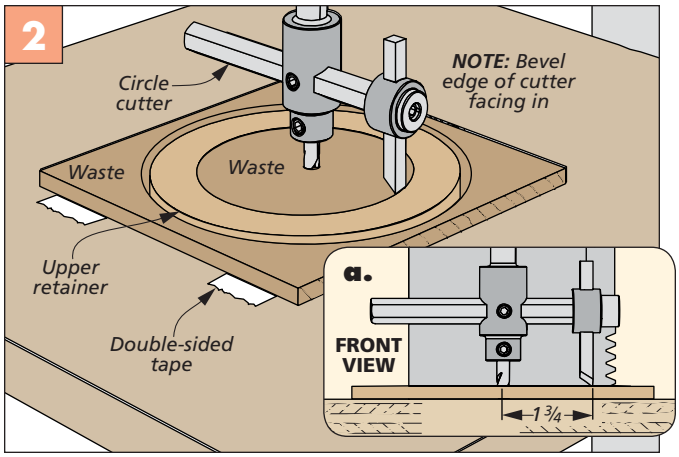

Splicing Cord

Weaving the seat for the stool that's on page 34 requires a lot of paracord. Looping a large amount of cord in and out of the stool was not practical. So I used shorter lengths of cord and spliced them together on the inside of the stool.

The knot that I used for the splice is called a sheet bend. It's a knot that's widely used in many settings. Once you've determined where you want the start of the splice to be, fold a loop in the existing cord there. To start the splice, feed the new cord under the existing one as shown in Figure 1.

Next, loop the new cord under the short side of the existing cord and back over the long side (Figure 2). Then pull the knot tight as shown in Figure 3.

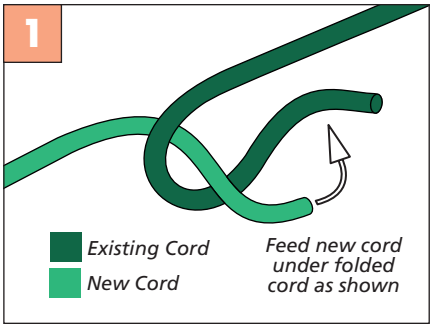

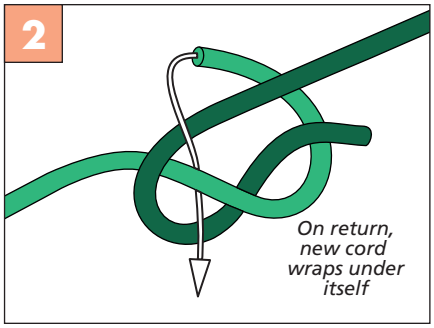

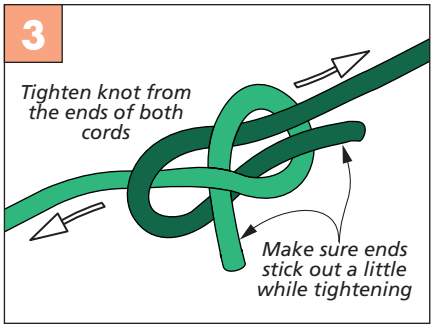

Custom Air Flow System

The router table storage cabinet on page 36 has a unique air flow port system on the front door panel. This system has three hardboard port covers that, when turned, line up with the air flow openings in the door panel. This allows for maximum air flow to aid a dust collection system.

PATTERNS. The scaled patterns for the openings in the door panel, as well as the openings in the port covers, are shown below. The reason there are two different patterns is that the port covers have slightly smaller openings so they cover the entire opening in the door panel when closed.

You'll also notice on both patterns a couple of small half-holes on the edge of the upper openings. These holes create little notches when the full opening is cut out. They'll house a toy axle that acts as a positive stop for the port covers in the open and closed positions.

PANEL OPENINGS. After attaching the pattern to my door panel, I drilled these holes first, as well as the center hole. I then drilled larger access holes in the center of each opening that were big enough to fit a jig saw blade. At this point, you can cut out all of the openings in the door panel, as shown in Figure 1.

PORT COVERS. The port covers follow a similar course. But instead of trying to cut the openings on small blanks, I made one oversized workpiece. Once the openings in each port cover are cut out with a jig saw, you can head to the band saw to cut each one free from the blank (Figure 2). A little sanding around the perimeter, and the covers are ready to mount to the door panel.

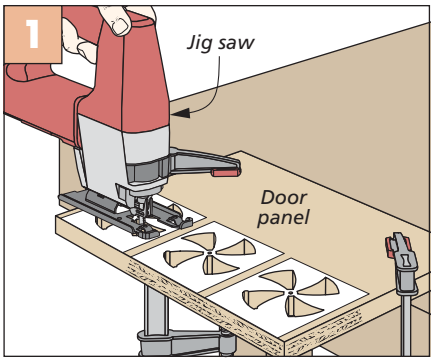

Door Openings. A jig saw and a little patience is all it takes to create the dust port openings in the door panel.

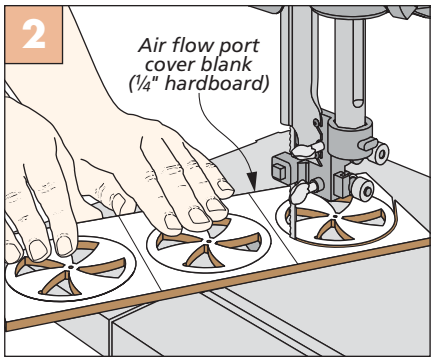

Port Covers. After cutting out the openings in the port cover blank, cut each one free at the band saw.

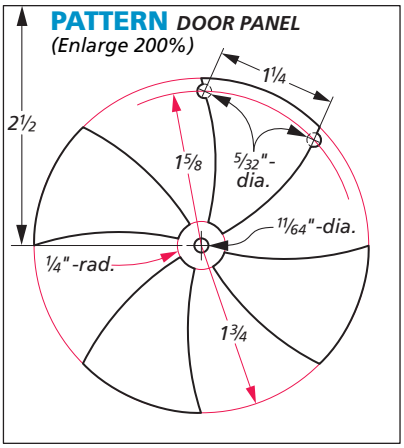

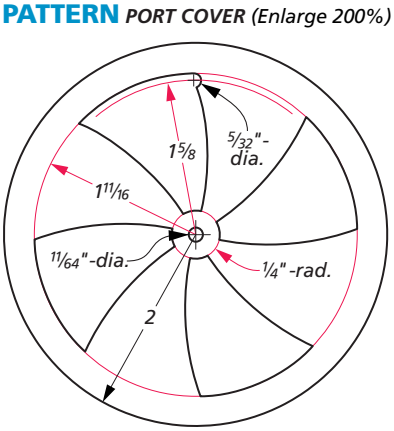

Woodsmith GO ONLINE EXTRAS For full-size patterns of the custom air ports, go to Woodsmith.com

Cutting Front Rail

The Byrdcliffe-inspired linen press on page 42 has a decorative lower front rail. This rail serves a few purposes. First, it acts as a resting place for the case of the linen press. Second, it offers an opportunity to add a little decoration to the front of the case.

BANDSAW. Start off by laying out the arcs on your blank. Next, use a band saw to cut the arc, staying on the waste side of the line. Start with the innermost arc, beginning your cut in the waste section as shown in Figure 1. Use a sanding drum to sand the radius of the arcs.

STRAIGHT CUTS. With the arcs cut on both ends of the rail, the last thing you need to do is clean up the straight center section. To do this, head over to the router table, and equip it with a flush-trim bit.

Use double-sided tape to attach a straightedge to your rail. Line it up carefully with the layout marks, as the bearing will guide the bit where you stick the straightedge. Rout along the straight edge from left to right. If there are areas where there is more than ⅛" or so of waste, lighten the cut in that area, and make multiple passes to avoid burning.

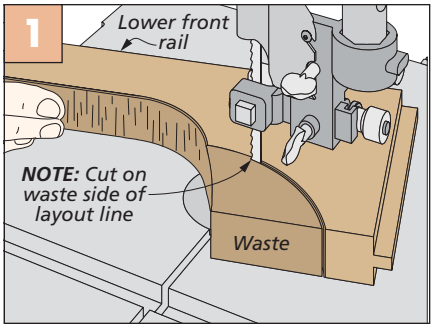

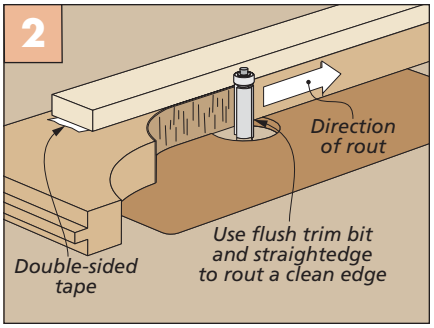

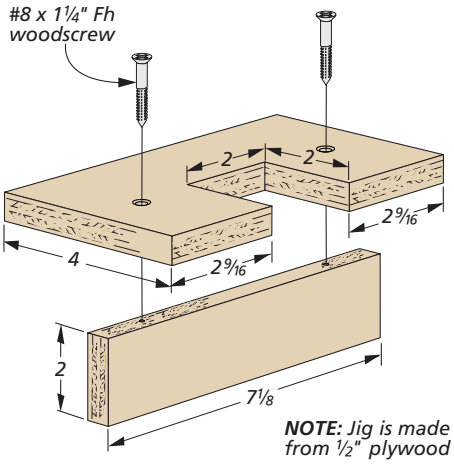

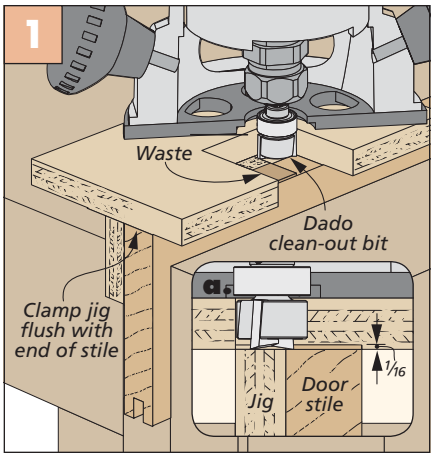

Hinge Mortising Jig

The linen press on page 42 has hinges that are mortised into the outside stile of each door. To create the mortises, I used a router equipped with a dado clean-out bit and the jig shown at left. The opening in the jig should be sized to match the length of your hinge leaf.

ROUTING. To use the jig, position it over the marked mortise location on the door stile. The depth of the mortise should match the thickness of the hinge leaf. Rout around the entire opening on the jig to ensure the entire mortise is cut.

Dado Cutting Jig

To attach the dividers to the sides of the linen press, I used my router and the jig shown here to create the dadoes in each side. The jig is made out of plywood and is sized to fit across both side panels at the same time, but can be used for the back panel, also.

PLYWOOD JIG. The jig consists of a pair of fences attached to two cleats, as shown in the drawing at right. Start by attaching one fence to the cleats first, making sure that it is square on both ends. Next, use your router base plate to mark the location of the second fence and attach it in place.

USING THE GUIDE. Before using the guide, I like to make a pass with my router and cut a shallow dado in each cleat. This gives me a reference mark where the router bit will pass, so I can easily line up the guide to the workpiece. Now, position the guide on your workpiece and clamp it in place. Using a plywood straight bit, make multiple passes across the workpiece until final depth is reached. The same process works to cut the dadoes in the back panel, but clamp both ends of the jig in place. W

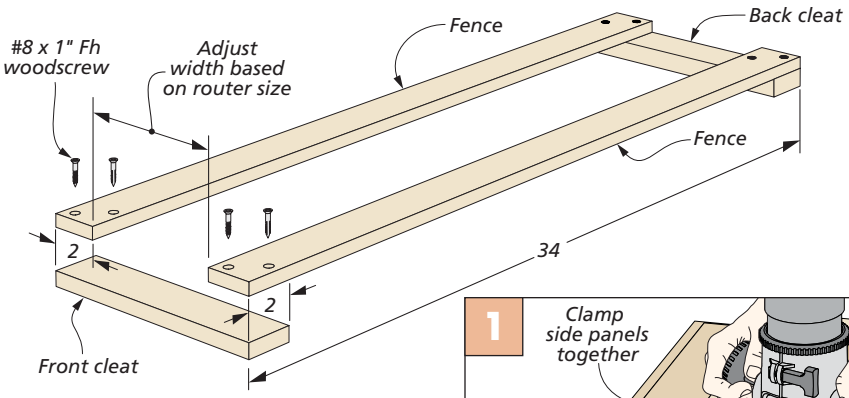

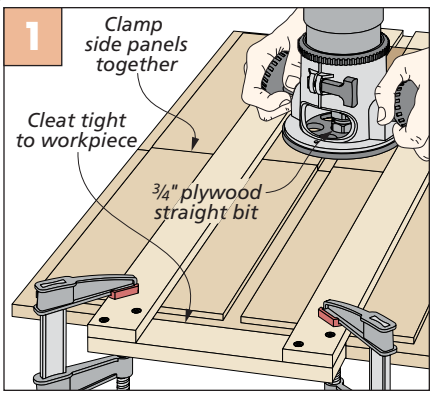

hardware & supplies
Sources

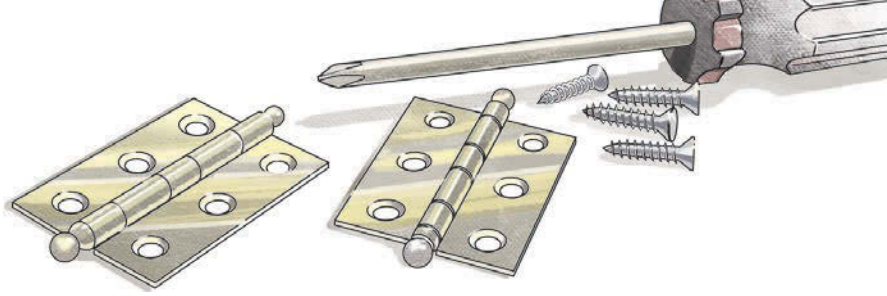

Most of the materials and supplies you'll need to build the projects are available at hardware stores or home centers. For specific products or hard-to-find items, take a look at the sources listed here. You'll find each part number listed by the company name. See the right margin for contact information.

SCRAPERS *(p.14)*

- **Woodcraft**
  - *Concave Scraper Set* 150104
  - *Convex Scraper Set* 150105
  - *Mini Scraper Set* 158977
  - *Chairmakers Scraper Set* .148723
  - *Sandvik Pocket Scraper* . .142555
- **Lee Valley**
  - *2½" Carbide Scraper* . .97K5203
  - *2" Carbide Scraper*. . . . 97K5101
- **Benchcrafted**
  - *Carbide Scraper*. . . . . SKRAPER

DOWEL JOINERY *(p.16)*

- **Rockler**
  - *¼" Doweling Jig* 48169
  - *¼" Dowels* 21113

DESK LAMP *(p.18)*

- **Lowe's**
  - *Light Socket* 884414
  - *40-Watt Light Bulb* 777454
- **Eshoji**
  - *Washable Shoji Paper*. . . . KD69
- **Sundial Wire**
  - *2-Conductor, 18 Gauge* . . varies

All of the lamp parts were individually finished with three coats of spray lacquer before assembly.

HAND PLANE *(p.24)*

- **Hock Tools**
  - *1½" x 3½" Blade Set* PI150

LIMITED SUPPLY!

Woodsmith is offering a custom blade and chipbreaker set for the hand plane on page 24. This set is made by *Hock Tools*, and we have a limited number available at a special price of $34.95. To order, refer to *Woodsmith* contact information in the margin at right.

- **Woodsmith**
  - *1½" x 3½" Blade Set* . .5005302

STOOL *(p.30)*

- **Paracord Galaxy**
  - *Dark Green Paracord* . . . 163-117
- **Cane and Basket Supply**
  - *Danish L-Nails* . . . . . TL-DN

Each stool requires approximately 350' of cord to complete the weave of the seat. L-nails come in boxes of 100, each stool uses 54 nails.

The stool is stained with a mixture of three parts *Zar* cherry stain and one part *Wood Kote Jel'd* stain (cherry).

ROUTER TABLE STORAGE *(p.36)*

- **Essentra Components**
  - *Utility Pulls* KHO-10
- **Rockler**
  - *18" Drawer Slides* 32490
  - *1½" Cord Grommet* 57855
- **Lee Valley**
  - *1½" Hinges* 00H51.11
  - *Mag. Touch Latch*. . . . 00W02.06
- **The Winfield Collection**
  - *Wooden Axle*. AXLE3
- **McMaster-Carr**
  - *⅝" O.D. Nylon Tube* . . 8628K56
  - *⅜" O.D. Nylon Tube* . . 8628K51

The rest of the parts for the router table cabinet can be found at most hardware stores and home centers.

LINEN PRESS *(p.42)*

- **Lee Valley**
  - *Classic Brass Knob* . . . 01A05.30
  - *Drop Handle*. 01A20.91
  - *Ball-Tip Hinges* 02H12.21
  - *Magnetic Catch* 03W11.07
- **Amana Tool**
  - *Ogee Stile Cutter* 49664

To finish the linen press, I first colored the oak with 16:2 mixture of *General Finishes* High-Performance Polyurethane water-based topcoat and green dye. Once the colored polyurethane was dried, the entire linen press was finished with multiple coats of *General Finishes Arm-R-Seal.*

RELIEF-CARVED PANELS *(p.52)*

- **Dick Blick**
  - *Cadmium Red* 00319-3331
  - *Yellow Ochre* 00319-4041
  - *Sap Green* 00319-7391
  - *Cadmium Yellow*. . . .00319-4201
  - *Cadmium Orange*. . .00319-4531
  - *Burnt Sienna* 00319-8041
  - *Burnt Sienna Pencil*. 20535-8040

FEATHERBOARDS *(p.62)*

- **Rockler**
  - *Bench Dog Featherboard* . 29799

MAIL ORDER SOURCES

Project supplies may be ordered from the following companies:

Benchcrafted
benchcrafted.com

Dick Blick
800-828-4548
dickblick.com

Cane and Basket Supply
323-939-9644
caneandbasket.com

Essentra Components
800-847-0486
essentracomponents.com

Eshoji
262-395-4627
eshoji.com

Hock Tools
888-282-5233
hocktools.com

Kreg Tool
800-447-8638
kregtool.com

Lee Valley
800-871-8158
leevalley.com

McMaster-Carr
630-833-0300
mcmaster.com

Paracord Galaxy
844-727-2267
paracordgalaxy.com

Rockler
800-279-4441
rockler.com

Sundial Wire
413-582-6909
sundialwire.com

The Winfield Collection
800-946-3435
thewinfieldcollection.com

Woodcraft
800-225-1153
woodcraft.com

Woodsmith
800-444-7527
woodsmith.com/store

Follow us on

looking inside
Final Details

▲ *Desk Lamp.* The unique shade on this desk lamp is made using a clever, but simple, band saw technique. You can discover the secret to how it's done by turning to page 18.

◄ *Woven-Seat Stool.* The graceful legs of this stool are capped off by a comfortable woven seat. We'll walk you though building it and weaving the seat, step-by-step, beginning on page 30.

▲ *Hand Plane.* A solid wood body and an extra-thick blade make this small plane a valuable addition to any shop. Learn how to build your own starting on page 24.

Router Table Storage. Upgrade your router table by adding this storage cabinet, complete with dust collection. You'll find complete plans on page 36. ►